TRANSMITTAL LETTER TO THE UNITED STATES DESIGNATED/ELECTED OFFICE (DO/EO/US) CONCERNING A FILING UNDER 35 U.S.C. 371		Attorney Docket No. **5001-1489** U.S. Application No.
INTERNATIONAL APPLN. NO. **PCT/IB2013/001191**	INTERNATIONAL FILING DATE **June 7, 2013**	PRIORITY DATE CLAIMED **January 30, 2013**

TITLE OF INVENTION: **INSTRUMENT FOR DRILLING DENTAL ROOT CANALS**

APPLICANT(S) FOR DO/EO/US: **1) Gilbert ROTA 2) Paul-Henri VALLOTTON**

Applicant herewith submits to the United States Designated Elected Office (DO/EO/US) the following items and other information:

1. ☒ This is a **FIRST** submission of items concerning a filing under 35 U.S.C. 371.
2. ☐ This is a **SECOND** or **SUBSEQUENT** submission of items concerning a filing under 35 U.S.C. 371.
3. ☒ This is an express request to begin national examination procedures (35 U.S.C. 371(f)).
4. ☒ The US has been elected (Article 31).
5. ☒ A copy of the International Application as filed (35 U.S.C. 371 (c)(2))
   a. ☐ is attached hereto (required only if not communicated by the International Bureau).
   b. ☒ has been communicated by the International Bureau. See attached PCT/IB/308 (Second Notice).
   c. ☐ is not required, as the application was filed in the United States Receiving Office (RO/US)
6. ☒ An English language translation of the International Application as filed (35 U.S.C. 371 (c)(2))
   a. ☒ is attached hereto.
   b. ☐ has been previously submitted under 35 U.S.C. 154(d)(4).
7. ☐ An oath or declaration of the inventor(s) (35 U.S.C. 371(c)(4)).
8. ☐ A Declaration of Inventorship for purposes of U.S.A. designation pursuant to rule 4.17(iv).
9. ☐ **Applicant claims small entity status. See 37 CFR 1.27.**
10. ☒ Information Disclosure Statement (IDS) w/PTO-1449 - ☒ Copy of IDS citations. - ☒ PCT/ISA/210 International Search Report included.
11. ☐ Assignment Papers filed via EFS.
12. ☒ A preliminary amendment.
13. ☒ An Application Data Sheet under 37 C.F.R. 1.76.
14. ☒ Abstract.
15. ☐ A substitute specification.
16. ☐ A computer-readable form of the sequence listing in accordance with PCT Rule 13*ter*.2 and 37 CFR 1.821 - 1.825.
17. ☒ Other items or information: **International Publication No. WO 2014/118591 (cover page only)**
18. ☒ The required filing fees are being paid online simultaneously herewith by credit card.
19. ☒ The Director is hereby authorized in this, concurrent, and future submissions, to charge payment or credit any overpayment to Deposit Account No. 25-0120 for any additional fee required under 37 C.F.R. §§ 1.16, 1.17, or 1.492.

SEND ALL CORRESPONDENCE TO:
YOUNG & THOMPSON
209 Madison Street
Suite 500
Alexandria, VA 22314
Telephone: (703) 521-2297
Facsimile: (703) 685-0573

Young &Thompson's Customer No. **00466**

BC/nmb

/Benoît Castel/
Signature

Benoit Castel, Reg. No. 35,041
Name, Registration Number

12 June 2015
Date

TRANSMITTAL LETTER TO THE UNITED STATES DESIGNATED/ELECTED OFFICE (DO/EO/US) CONCERNING A FILING UNDER 35 U.S.C. 371		Attorney Docket No. **5001-1489** U.S. Application No.
INTERNATIONAL APPLN. NO. **PCT/IB2013/001191**	INTERNATIONAL FILING DATE **June 7, 2013**	PRIORITY DATE CLAIMED **January 30, 2013**

TITLE OF INVENTION: **INSTRUMENT FOR DRILLING DENTAL ROOT CANALS**

APPLICANT(S) FOR DO/EO/US: **1) Gilbert ROTA 2) Paul-Henri VALLOTTON**

Applicant herewith submits to the United States Designated Elected Office (DO/EO/US) the following items and other information:

1. ☒ This is a **FIRST** submission of items concerning a filing under 35 U.S.C. 371.
2. ☐ This is a **SECOND** or **SUBSEQUENT** submission of items concerning a filing under 35 U.S.C. 371.
3. ☒ This is an express request to begin national examination procedures (35 U.S.C. 371(f)).
4. ☒ The US has been elected (Article 31).
5. ☒ A copy of the International Application as filed (35 U.S.C. 371 (c)(2))
   a. ☐ is attached hereto (required only if not communicated by the International Bureau).
   b. ☒ has been communicated by the International Bureau. See attached PCT/IB/308 (Second Notice).
   c. ☐ is not required, as the application was filed in the United States Receiving Office (RO/US)
6. ☒ An English language translation of the International Application as filed (35 U.S.C. 371 (c)(2))
   a. ☒ is attached hereto.
   b. ☐ has been previously submitted under 35 U.S.C. 154(d)(4).
7. ☐ An oath or declaration of the inventor(s) (35 U.S.C. 371(c)(4)).
8. ☐ A Declaration of Inventorship for purposes of U.S.A. designation pursuant to rule 4.17(iv).
9. ☐ **Applicant claims small entity status. See 37 CFR 1.27.**
10. ☒ Information Disclosure Statement (IDS) w/PTO-1449 - ☒ Copy of IDS citations. - ☒ PCT/ISA/210 International Search Report included.
11. ☐ Assignment Papers filed via EFS.
12. ☒ A preliminary amendment.
13. ☒ An Application Data Sheet under 37 C.F.R. 1.76.
14. ☒ Abstract.
15. ☐ A substitute specification.
16. ☐ A computer-readable form of the sequence listing in accordance with PCT Rule 13*ter*.2 and 37 CFR 1.821 - 1.825.
17. ☒ Other items or information: **International Publication No. WO 2014/118591 (cover page only)**
18. ☒ The required filing fees are being paid online simultaneously herewith by credit card.
19. ☒ The Director is hereby authorized in this, concurrent, and future submissions, to charge payment or credit any overpayment to Deposit Account No. 25-0120 for any additional fee required under 37 C.F.R. §§ 1.16, 1.17, or 1.492.

SEND ALL CORRESPONDENCE TO:
YOUNG & THOMPSON
209 Madison Street
Suite 500
Alexandria, VA 22314
Telephone: (703) 521-2297
Facsimile: (703) 685-0573

Young &Thompson's Customer No. **00466**

BC/nmb

/Benoît Castel/
Signature

Benoit Castel, Reg. No. 35,041
Name, Registration Number

12 June 2015
Date

INSTRUMENT FOR DRILLING DENTAL ROOT CANALS

The object of the present invention is an instrument for drilling dental root canals.

The treatment of an infected dental root is carried out by extracting the pulp using special instruments, then by shaping the root canal using successive drilling procedures, traditionally carried out with instruments of varying size and conicity. The final operation consists of filling the root canal.

The shaping of the root canal consists initially of enlarging the canal in its crown and medial parts to permit, as a second step, easier treatment of the apical part of the canal by mechanical cleaning the infected tissues.

An instrument designed for drilling dental root canals generally has a tapered rod fitted into a handle to permit it to be driven manually or mechanically and comprising, on at least part of its length, helicoidal flutes with a constant or non-constant pitch, and having at least one cutting edge.

Used in continuous rotation, this type of instrument may have a tendency to screw itself into the canal. Apart from the screwing action, another problem occurring in the production of instruments for drilling root canals is that of the strength and flexibility of the instruments. Indeed, when the instrument is too flexible it may bend or break before the practitioner has been able to complete the operation and when the instrument is too rigid, it follows the curvature of the dental root canal only with difficulty.

Numerous instruments have been developed in response to these problems. Document EP 1 361 831 describes an instrument for drilling dental canals comprising a base, a cutting section and a guiding section, the cutting section being defined by an envelope of a cylindrical or conical shape, the longitudinal axis of which coincides with the axis of rotation of the instrument. The cutting section has clearance zones disposed set-back with respect to the envelope, alternating with drilling zones disposed on said envelope.

This alternating arrangement of zones on the envelope and set back from the envelope makes it possible to reduce the risk of screwing the instrument into the dental canal. Furthermore, the axis of the cutting section can be offset with respect to the axis of the envelope. This makes it possible to deepen the clearance zones and to make the evacuation of the debris during treatment more effective.

Document US 7 955 078 describes an endodontic instrument for preparation of dental root canals comprising a body shaped to turn about an axis of rotation. The body has a centre of mass which is not located on the axis of rotation of the instrument, thus giving the impression that the instrument is undulating ("swaggering") when it is rotated. An instrument such as this has greater flexibility and thus makes it possible to follow the complex curves of a dental root canal most effectively.

However, in these two documents the axis of the active part is offset with respect to the axis of rotation of the instrument over the whole length of said active part and in particular the axis of the point of the instrument is offset. This can generate a beating motion of the point within the canal. It thus becomes difficult to ensure optimum dimensioning of the canal during treatment, in particular in its apical portion. Moreover, a point with its axis offset also has the disadvantage of pushing the debris back towards the apical portion rather than evacuating it towards the top of the canal.

The aim of the present invention is to produce an instrument for drilling dental root canals which obviates the stated disadvantages. In particular, one aim of the present invention is thus to produce an instrument which is flexible while being strong, reliable and effective and which makes it possible at the same time to respect the initial path of the root canal to be treated and to ensure optimum dimensioning of the canal in its apical portion after treatment.

The object of the present invention is an instrument for drilling dental root canals as claimed in claim 1.

The drawings schematically illustrate by way of example a plurality of embodiments of the instrument in accordance with the invention.

Figure 1 illustrates a first embodiment of an instrument for drilling dental root canals in accordance with the invention.

Figure 2 is a cross-sectional view at the line II-II of the instrument shown in figure 1.

Figure 3 is a cross-sectional view at the line III-III of the instrument shown in figure 1.

Figure 4 is a cross-sectional view at the line IV-IV of the instrument shown in figure 1.

Figure 5 illustrates a second embodiment of an instrument for drilling dental root canals in accordance with the invention.

Figure 6 is a cross-sectional view at the line VI-VI of the instrument shown in figure 5.

Figure 7 is a cross-sectional view at the line VII-VII of the instrument shown in figure 5.

Figure 8 illustrates a third embodiment of an instrument for drilling dental root canals in accordance with the invention.

Figure 9 is a cross-sectional view at the line A-A of the instrument shown in figure 8.

Figure 10 is a cross-sectional view at the line B-B of the instrument shown in figure 8.

Figure 11 is a cross-sectional view at the line C-C of the instrument shown in figure 8.

Figure 12 is a cross-sectional view at the line D-D of the instrument shown in figure 8.

Figure 13 is a cross-sectional view at the line E-E of the instrument shown in figure 8.

Figure 14 is a cross-sectional view at the line F-F of the instrument shown in figure 8.

In a first embodiment shown in figure 1 the instrument in accordance with the invention comprises a rod 1 fitted at one of its ends 1a in a handle 2 permitting either manual actuation of the instrument or preferably its engagement in a hand-held part providing mechanical driving of the said instrument. In particular, the instrument 1 is intended to be driven in rotation about its axis of rotation R.

The rod 1 has an active part 1b extending to the other end 3 - the point 3 - of the rod 1. Said active part 1b is preferably tapered and conical, narrowing to the point 3 of the rod 1. Alternatively, the active part 1b or the whole rod 1 could be cylindrical rather than conical.

The active part 1b has a polygonal cross-section (the sides of which are straight or curved) and comprises cutting edges. More particularly in this first embodiment, the active part 1b has, over its whole length, a square cross-section 4 forming four cutting edges 5a, 5b, 5c, 5d defining between them four helicoidal flutes 6, one flute being the face defined between two successive cutting edges of the active part 1b. The active part 1b is defined by an envelope 7 which is substantially tapered and has its longitudinal axis coinciding with the axis of rotation R of the instrument.

The particular feature of the instrument in accordance with the invention resides in the fact that the active part 1b has a first portion 1c extending from the point 3 towards the rear of the active part 1b and of which the centre of mass is located on the axis of rotation R of the instrument and a second portion 1d extending from the end of the first portion 1c to the rear of the active part 1b and of which at least one cross-section has a centre of mass which is not located on the axis of rotation R of the instrument but is offset with respect to said axis R. In the first embodiment shown in figures 1 to 4, any cross-section of the second portion 1d of the active part 1b of the instrument 1 has a centre of mass which is not located on the axis of rotation R but is offset with respect to

said axis.

More precisely, and as shown in figure 2, in accordance with the invention any cross-section 4a of the first portion 1c has its centre of mass ma on the axis of rotation R of the instrument. Moreover, in this first embodiment the four edges 5a, 5b, 5c, 5d of such a cross-section 4a are located on the envelope 7. Thus the first portion 1c and in particular the point 3 are centred with respect to the axis of rotation R of the instrument or in other words the longitudinal axis of the first portion 1c coincides with said axis of rotation R.

As shown in figures 3 and 4, in the first embodiment, any cross-section 4b of the second portion 1d of the active part 1b has its centre of mass mb offset with respect to the axis of rotation R of the instrument and preferably a single cutting edge 5a of such a cross-section 4b is located on the envelope 7, the other cutting edges 5b, 5c and 5d being disposed inside said envelope 7. Thus in the first embodiment the whole of the second portion 1d of the active part 1b is off-centre with respect to the axis of rotation R of the instrument.

Thus an effective instrument is obtained because its point 3 is centred, does not generate any beating within the canal and has four active cutting edges.

Such an instrument in accordance with the invention can be obtained from a rod with a circular cross-section, preferably made from a nickel-titanium alloy, by providing therein helicoidal flutes by machining (milling), these flutes defining cutting edges such that the cross-section of the rod 1 is polygonal over the whole length of its active part 1b. In order to achieve the particular geometry of the active part 1b in accordance with the invention, the flutes 6 of the second portion 1d of the active part 1b are overcut with respect to the flutes 6 of the first portion 1c in order to obtain at least one cross-section 4b of said second portion 1d of which at least one cutting edge is set back within the envelope 7 and of which the centre of mass mb is offset with respect to the axis of rotation R. Thus on the second portion 1d of the active part 1b material is removed

from the instrument in accordance with the invention, which makes it more flexible on this second portion than a traditional instrument which would have, over its whole active part, a cross-section with its centre of mass centred on the axis of rotation and all its edges inscribed on the envelope. By virtue of the present invention, an instrument is obtained which is effective at its point 3 while being flexible.

Preferably, in the first embodiment, the second portion 1d has a progressive offset with respect to the axis of rotation R in the direction of the rear of the instrument: i.e. a cross-section of the second portion 1d close to the point has its centre of mass less offset proportionally to the surface of the cross-section with respect to said axis of rotation R than a cross-section of the second portion 1d closer to the rear of the instrument. In terms of machining the instrument, this produces flutes 6 which are overcut proportionally more and more along the second portion 1d of the active part 1b with respect to the flutes of the first portion 1c. Thus in this first embodiment the flexibility of the instrument is adjustable and in particular increases progressively towards the rear of the active part 1b.

Preferably, the first portion 1c of the active part extends over a length of 3 millimetres starting from the point 3 of the active part 1b. In a still more preferred manner, said first portion 1c has a length of 1 millimetre.

Figures 5 to 7 show a second embodiment of an instrument in accordance with the invention in which the active part 1b has, over its whole length, a rectangular cross-section 4' forming four cutting edges 5a, 5b, 5c, 5d defining four helicoidal flutes 6, one flute being the face defined between two successive cutting edges of the active part 1b. As in the first embodiment, the active part 1b is defined by an envelope 7 which is substantially tapered and has the axis of rotation R of the instrument as its longitudinal axis.

The active part 1b also has a first portion 1c extending from the point 3 towards the rear of the active part 1b and having its centre of mass located on the axis of rotation R

of the instrument and a second portion 1d extending from the end of the first portion 1c to the rear of the active part 1b and of which at least one cross-section has a centre of mass offset with respect to the axis of rotation R of the instrument. Preferably, and as in the first embodiment, any cross-section of the second portion 1d of the instrument in accordance with the second embodiment has a centre of mass offset with respect to the axis of rotation R.

In this second embodiment, and as shown in figure 6, any cross-section 4'a of the first portion 1c is square and has its centre of mass m'a on the axis of rotation R of the instrument. Furthermore, the four edges 5a, 5b, 5c, 5d of such a cross-section 4'a are located on the envelope 7 of the instrument. As shown in figure 7, any cross-section 4'b of the second portion 1d of the active part 1b has its centre of mass m'b offset with respect to the axis of rotation R of the instrument. In contrast to the first embodiment, for each cross-section 4'b of the second portion 1d of the active part 1c of the instrument in accordance with the second embodiment, two cutting edges 5a and 5b are on the envelope 7, the two other cutting edges 5c and 5d being disposed inside said envelope 7.

The other considerations relating to the first embodiment remain valid for this second embodiment.

As shown in figures 6 and 7, the cross-sections 4'a and 4'b of the first and second portions 1c, 1d are not necessarily symmetrical, the cross-section 4'a preferably being square, while the cross-section 4'b may be rectangular.

Figures 8 to 14 show a third embodiment of an instrument in accordance with the invention, in which the active part 1b of the instrument has, over its whole length, a polygonal cross-section 40 of a parallelogram shape, forming four cutting edges 51, 52, 53, 54 defining four helicoidal flutes 6, one flute being the face defined between two successive cutting edges of the active part 1b. As in the previous embodiments, the active part 1b is defined by an envelope 7 which is substantially tapered and has the

axis of rotation R of the instrument as its longitudinal axis.

In accordance with the invention, the active part 1b has a first portion 1c extending from the point 3 towards the rear of the active part 1b and having its centre of mass located on the axis of rotation R of the instrument. In this third embodiment, and as shown in figure 9, any cross-section 40a of the first portion 1c is in the form of a parallelogram and has its centre of mass $m_{40}a$ on the axis of rotation R of the instrument. Moreover, in this embodiment, two diagonally opposed cutting edges 52, 54 of such a cross-section 40a are located on the envelope 7 of the instrument, while the other pair of diagonally opposed cutting edges 51, 53 is located set back within the envelope 7.

In accordance with the invention, the active part 1b also has a second portion 1d extending from the end of the first portion 1c to the rear of the active part 1b, of which at least one cross-section has a centre of mass which is not located on the axis of rotation R of the instrument but which is offset with respect to said axis R. In the third embodiment of the invention, and as shown in figures 8 and 10 to 14, the second portion 1d has an alternating arrangement of first zones - off-centre zones 11 - in which any cross-section 401b has a centre of mass $m_{401}b$ offset with respect to the axis of rotation R of the instrument and second zones - centred zones 12 - in which any cross-section 402b has a centre of mass $m_{402}b$ located on the axis of rotation R of the instrument. The zone of the second portion 1d directly adjacent to the first portion 1c of the active part 1b of the instrument is an off-centre zone 11 (see figure 8).

Figures 11 and 13 each show a cross-section 402b of a centred zone 12 located along the second portion 1d of the active part 1b of the instrument, while figures 10, 12 and 14 each show a cross-section 401b of an off-centre zone 11 located along said second portion 1d.

Preferably, and as shown in figures 11 and 13, for each cross-section 402b of a centred zone 12, two diagonally opposed cutting edges 52, 54 are located on the envelope 7 of the instrument, while the other pair of diagonally opposed cutting edges

51, 53 is located set back within the envelope 7.

In a similar, preferred manner, and as shown in figures 10, 12 and 14, for each cross-section 401b of an off-centre zone 11, a single cutting edge 52, 54 appertaining to the pair of diagonally opposed cutting edges 52, 54 located on the envelope along the first portion 1c of the active part 1b of the instrument is located on the envelope 7 of the instrument, while the other cutting edges are located set back within the envelope 7.

Thus, apart from the alternation between the centred and off-centre zones 12,11 on the second portion 1d of the active part 1b of the instrument, in this third embodiment, said second portion 1d also has an alternating arrangement between the cutting edges located on the envelope. The succession of the different zones on the second section 1d of the instrument in accordance with the third embodiment can be described as follows:

- The first zone of the second portion 1d immediately adjacent to the first portion 1c of the active part 1b of the instrument is an off-centre zone 11. For each cross-section 401b of this off-centre zone 11, only one of the two diagonally opposed cutting edges 52, 54 located on the envelope 7 for any cross-section 40a of the first portion 1c - the first cutting edge 52 - is located on the envelope 7 of the instrument, the second of these cutting edges 54 and the second pair of diagonally opposed cutting edges 51, 53 being set back within the envelope 7 (figure 10);
- The second zone is a centred zone 12. For each cross-section 402b of this centred zone 12, the first and second diagonally opposed cutting edges 52, 54 are again on the envelope 7 of the instrument, the second pair of diagonally opposed edges 51, 53 still being set back within the envelope 7 (figure 11);
- The third zone is again an off-centre zone 11. However, in this zone the second cutting edge 54 diagonally opposed to the first 52 and which was set back within the envelope on the first zone is now located on the envelope 7, while the first cutting edge 52 is then located within the envelope 7, the

second pair of diagonally opposed cutting edges 51, 53 still being set back within the envelope 7 (figure 12).

The following zone shown in figure 13 is similar to the first zone and the alternating arrangement thus extends along the second portion 1d of the active part 1b of the instrument.

Thus the instrument in accordance with the third embodiment has two cutting edges 52, 54 which are located on the envelope for any cross-section 40a of the first portion 1c of the active part 1b and for any cross-section 402b of the centred zones 12 of the second portion 1d of the active part 1b but of which at least one of the two is set back within the envelope 7 for any cross-section 401b of an off-centre zone 11 of the second portion 1d, two off-centre zones 11 separated by a centred zone 12 not having the same cutting edge on the envelope 7.

In variations, the second pair of diagonally opposed cutting edges 51, 53 could be located on the envelope 7 of the instrument for any cross-section of the active part 1b or for any cross-section of the first portion 1c or for any centred cross-section 12 of the second portion 1d. The second pair of diagonally opposed cutting edges 51, 53 could also follow the same alternating arrangement described above as the first pair of cutting edges 52, 54 along the second portion 1d of the active part 1b of the instrument.

The other considerations relating to the first two embodiments remain valid for this third embodiment.

In particular, the first portion 1c of the active part preferably extends over a length of 3 millimetres from the point 3 of the active part 1b. In a still more preferred manner, said first portion 1c has a length of 1 millimetre.

Thus as in the first two embodiments described above, the instrument in accordance with the third embodiment is effective since it has a point 3 which is centred and does

not generate beating in the canal and permits precise shaping of said canal. Said instrument is also flexible at the rear owing to the presence of the off-centre zones on the second portion 1d of its active part 1b. However, in contrast to the first two embodiments in which the whole of the second portion 1d is off-centre and thus may generate a beating motion at the rear of the instrument, the alternating arrangement of centred and off-centre zones as described in the third embodiment makes it possible to ensure that the instrument is flexible while avoiding beating by ensuring the shape of the envelope generated by the instrument in rotation. Thus the instrument in accordance with the third embodiment retains all the advantages described in relation to the first two embodiments while reducing the beating motion at the rear of the instrument, a motion which could reduce the precision and speed of treatment of the dental root canal.

The embodiments presented above describe polygonal cross-sections with straight sides. It is clear that said sides could be curved. Consequently, the term "polygonal" should be understood in its general sense meaning "which has a plurality of sides" and covering equally a geometric shape with straight or curved sides.

The instrument in accordance with the invention could obviously have other known features such as variable conicity. Similarly, the flutes can be oriented equally to the right or left or even have a variable pitch.

In a general manner, the active part of an instrument in accordance with the invention has, over is whole length, a polygonal cross-section forming at least two cutting edges. The active part is defined by an essentially conical or cylindrical envelope, the longitudinal axis of which coincides with the axis of rotation of the instrument. The active part comprises a first portion extending from the point of the instrument and which is such that any cross-section of this first portion has its centre of mass on the axis of the envelope and defines at least two cutting edges which are all located on said envelope. The active part also comprises a second portion extending following the first portion towards the rear of the active part and which is such that at least one cross-

section of this second portion has a centre of mass which is not located on the axis of the envelope but which is offset with respect to this axis and defines cutting edges, of which at least one is located on the envelope and at least one is located set back within said envelope.

The instrument in accordance with the invention thus has a point which is centred with respect to the axis of rotation of the instrument and a rear part, of which at least one cross-section is off-centre. The centred point makes it possible to follow the initial path of the root canal, to avoid any beating motion within said canal in the vicinity of the point and to ensure dimensioning in the preparation of the apical part of the canal. Moreover, the centred point avoids debris descending towards said apical part of the canal and contributes to successful evacuation thereof. This evacuation is further facilitated by the fact that at least one cross-section of the rear part is off-centre: the debris in fact has more space to be carried out of the canal and the off-centring of at least one cross-section of the rear part of the instrument creates a dynamic effect which lifts the debris out of the canal.

Moreover, an instrument in accordance with the present invention makes it possible to ensure strength in the part close to the point in order thus to reduce the risk of breaking the instrument in its most fragile portion. The flexibility of the instrument is not thereby reduced, since the second portion having at least one off-centre cross-section of the instrument makes the instrument flexible and this flexibility can even be progressive towards the rear of the instrument either by adjusting the off-centring of the second portion of the active part of the instrument as described in the case of the first and second embodiments or by alternating centred cross-section with off-centre cross-section along the second portion of the active part of the instrument as described in the third embodiment. Thus the instrument can be rendered sufficiently flexible to follow the complex contour of a dental root canal.

Finally, the active cutting edges of the point of the instrument, i.e. those which are located on the envelope, ensure a good level of efficacy of the instrument. At the rear,

the contact zones of the instrument are reduced since some of the edges are located set back within the envelope of the instrument, which makes it possible to reduce the screwing effect and superfluous forces on the rear part of the instrument.

Thus a high-performance instrument is produced having a good balance between efficacy, flexibility and resistance to breaking and to the screwing effect.

Claims

1 Instrument for drilling dental root canals comprising a tapered rod (1) having over at least a part of its length - the active part (1b) - a polygonal cross-section (4) forming at least two cutting edges (5a, 5b; 52, 54), said active part (1b) terminating by a point (3) and being defined by an envelope (7) of a cylindrical or conical shape, the longitudinal axis of which coincides with the axis of rotation (R) of the instrument, characterised in that said active part (1b) has a first portion (1c) extending from the point (3) and a second portion (1d) extending following the first portion (1c) towards the rear of the active part (1b); by the fact that any cross-section (4a; 4'a; 40a) of the first portion (1c) has a centre of mass (ma; m'a m_{40}a) located on the axis of rotation (R) and that said at least two cutting edges (5a, 5b; 52, 54) defined by said cross-section (4a; 4'a; 40a) are located on the envelope (7); and by the fact that at least one cross-section (4b; 4'b; 401b) of the second portion (1d) has a centre of mass (mb; m'b m_{401}b) offset with respect to the axis of rotation (R) and at least one cutting edge (5a; 52, 54) defined by said cross-section (4b; 4'b; 401b) is located set back within the envelope (7).

2 Instrument as claimed in claim 1, characterised in that any cross-section (4b; 4'b) of the second portion (1d) has a centre of mass (mb; m'b) offset with respect to the axis of rotation (R) and at least one cutting edge (5a) defined by said cross-section (4b; 4'b) is located set back within the envelope (7).

3 Instrument as claimed in claim 2, characterised in that exactly one cutting edge (5a) defined by any cross-section (4b) of the second portion (1d) of the active part (1b) is located on the envelope (7).

4 Instrument as claimed in any one of claims 2 or 3, characterised in that a cross-section (4b) of the second portion (1d) of the active part (1b) located close to the point (3) has a centre of mass (mb) proportionally closer to the axis of rotation (R) than the centre of mass of a cross-section of said second portion (1d) located at

the rear of the active part (1b).

5 Instrument as claimed in claim 1, characterised in that the second portion (1d) has an alternating arrangement of centred zones (12) in which any cross-section (402b) has a centre of mass (m_{402}b) on the axis of rotation (R) and said at least two cutting edges (52, 54) defined by said cross-section (402b) are located on the envelope (7) and off-centre zones (11) in which any cross-section (401b) has a centre of mass (m_{401}b) offset with respect to said axis of rotation (R) and at least one cutting edge (52, 54) defined by said cross-section (401b) is located set back within the envelope (7).

6 Instrument as claimed in claim 5, characterised in that the off-centre zones (11) alternate between first zones in which for any cross-section (401b) a first (52) of the at least two cutting edges (52, 54) defined by said cross-section is located set back within the envelope (7) while the second (54) of the at least two cutting edges is located on the envelope (7) and second zones in which for any cross-section, the second (54) of the at least two cutting edges (52) defined by said cross-section is located set back within the envelope (7) while the first (52) is located on the envelope (7).

7 Instrument as claimed in any one of the preceding claims, characterised in that the active part (1b) has over its whole length a polygonal cross-section with straight sides.

8 Instrument as claimed in any one of the preceding claims, characterised in that the first portion (1c) of the active part (1b) has a square cross-section and that the second portion (1d) of the active part has a rectangular cross-section.

9 Instrument as claimed in any one of the preceding claims, characterised in that the first portion (1c) of the active part (1b) has a length between 1 and 3 millimetres.

Abstract

The present invention relates to an instrument for drilling dental root canals comprising a tapered rod (1) having over at least a part of its length - the active part (1b) - a polygonal cross-section (4) forming at least two cutting edges (5a, 5b), said active part (1b) terminating by a point (3) and being defined by an envelope (7) of a cylindrical or conical shape, the longitudinal axis of which coincides with the axis of rotation (A) of the instrument. Said active part (1b) has a first portion (1c) extending from the point (3) and a second portion (1d) extending following the first portion (1c) towards the rear of the active part (1b). At least one cross-section (4a) of the first portion (1c) has a centre of mass (ma) located on the axis of rotation (A) and said cutting edges (5a, 5b) defined by said cross-section (4a) are located on the envelope (7). Any cross-section (4b) of the second portion (1d) has a centre of mass (mb) offset with respect to the axis of rotation (A) and at least one cutting edge (5a) defined by said cross-section (4b) is located set back within the envelope (7).

(Figure 1)

Fig.1

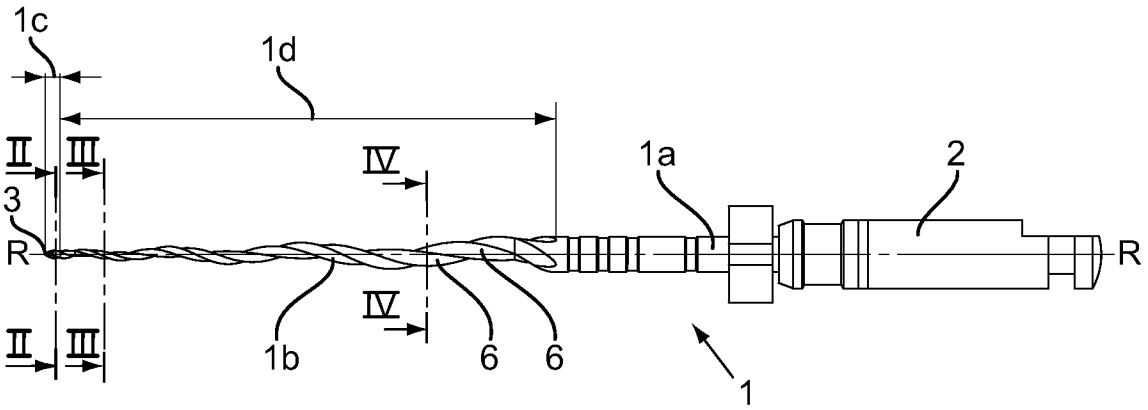

Fig.2

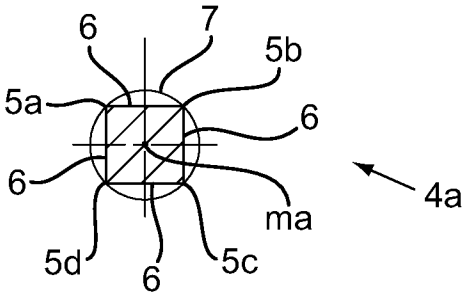

Fig.3

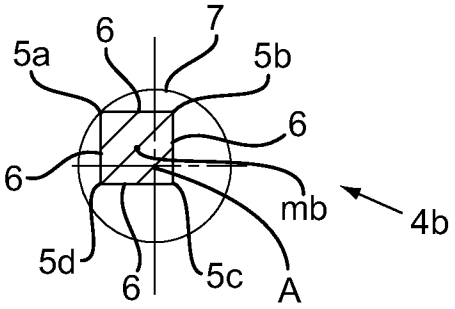

Fig.4

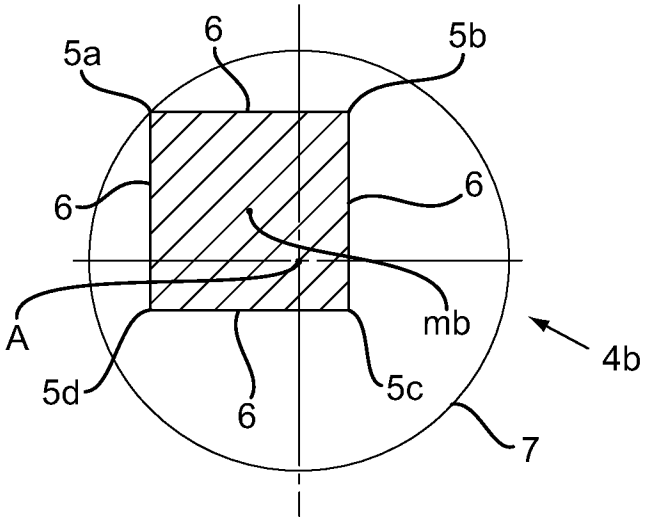

Fig.5

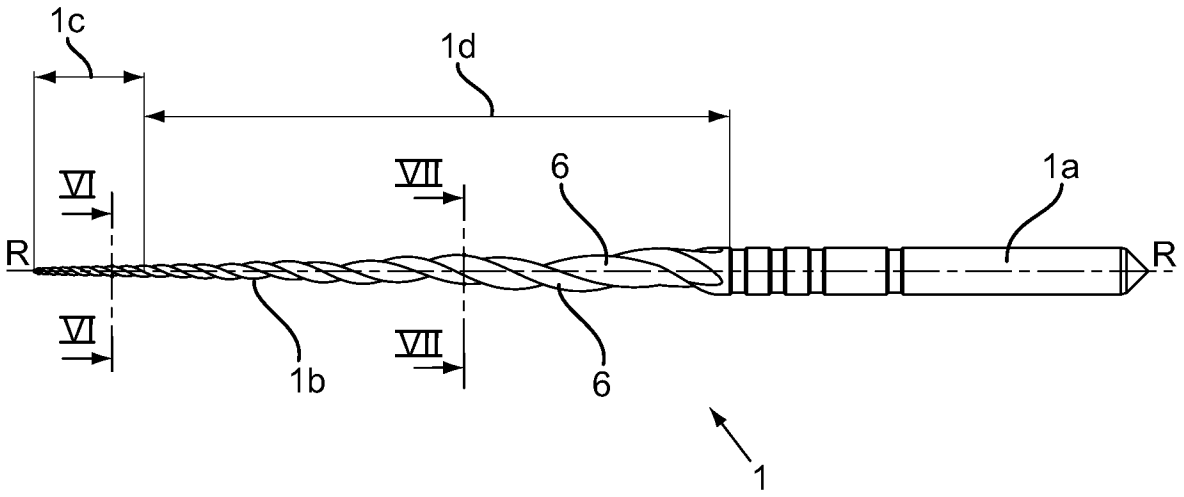

Fig.6

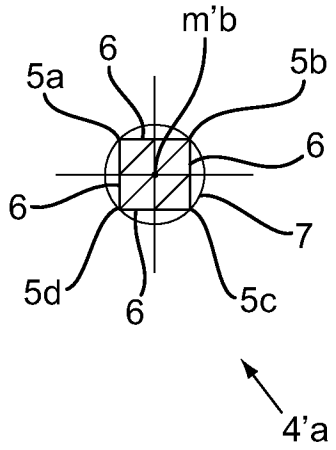

Fig.7

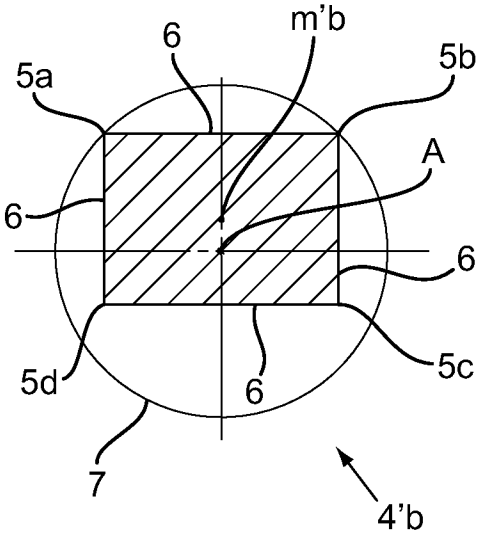

Fig.8

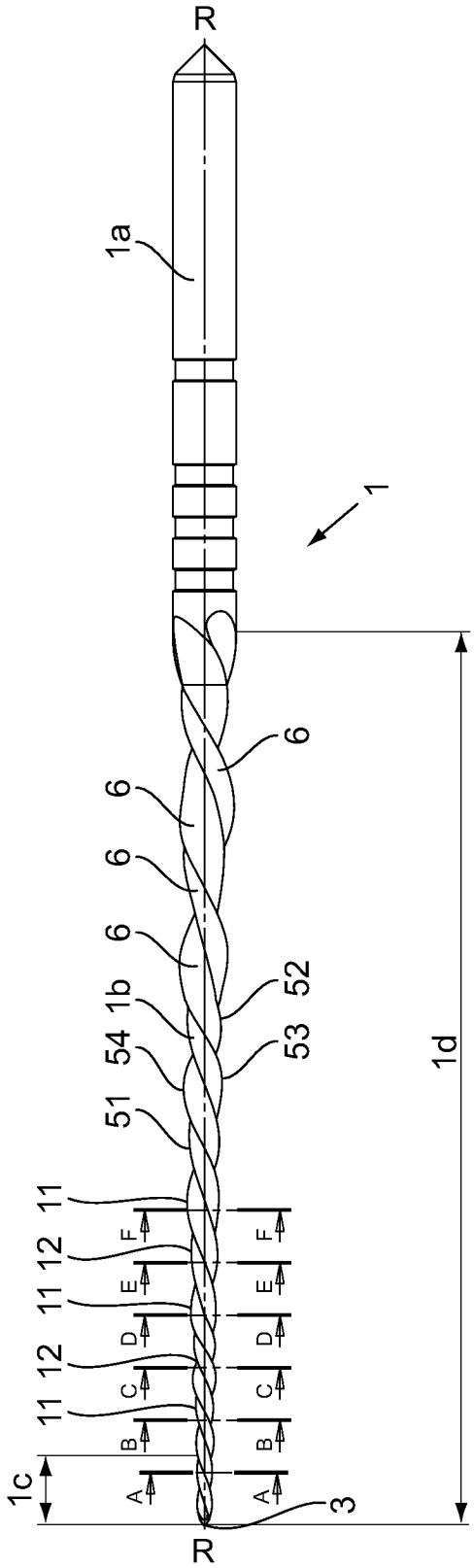

Fig.9

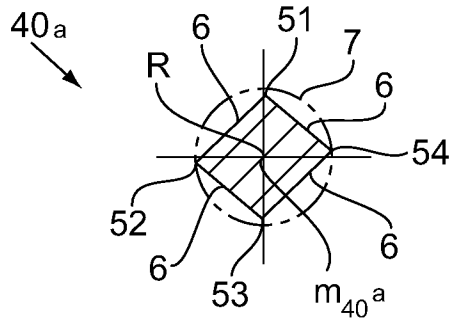

Fig.10

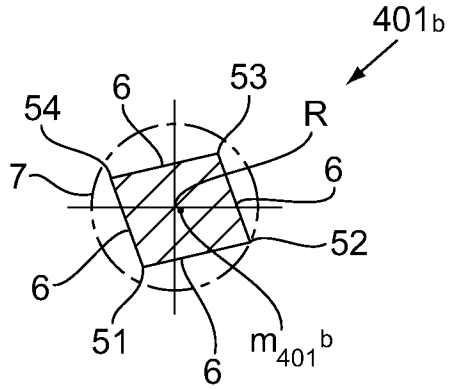

Fig.11

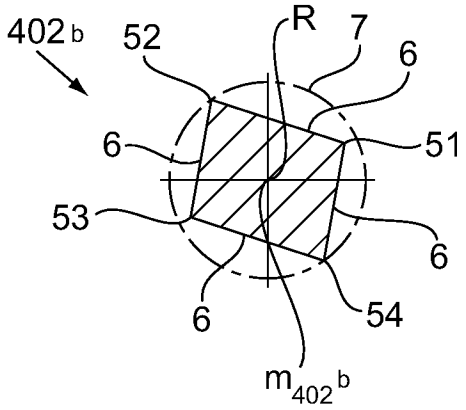

Fig.12

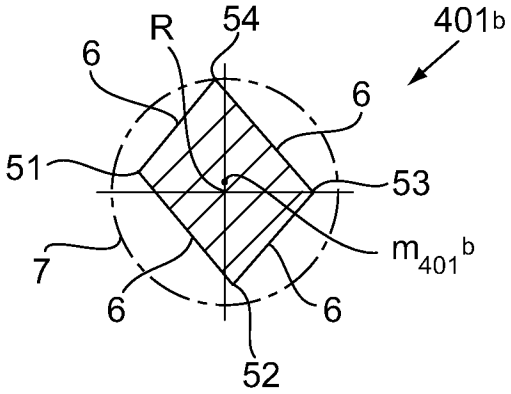

Fig.13

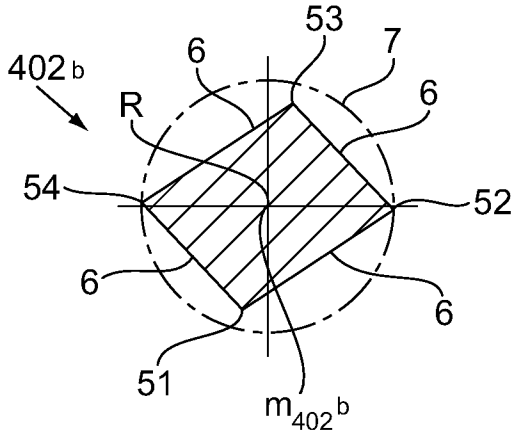

Fig.14

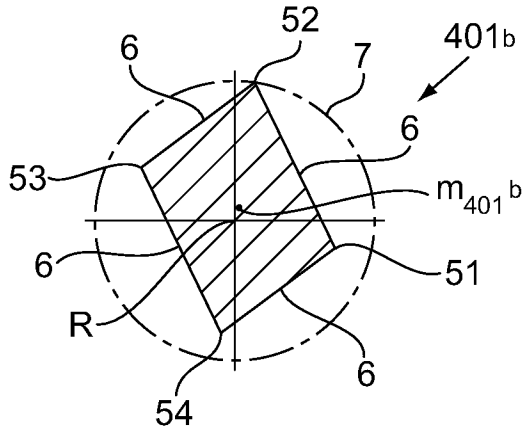

Application Data Sheet 37 CFR 1.76	Attorney Docket Number	5001-1489
	Application Number	
Title of Invention	INSTRUMENT FOR DRILLING DENTAL ROOT CANALS	

The application data sheet is part of the provisional or nonprovisional application for which it is being submitted. The following form contains the bibliographic data arranged in a format specified by the United States Patent and Trademark Office as outlined in 37 CFR 1.76.
This document may be completed electronically and submitted to the Office in electronic format using the Electronic Filing System (EFS) or the document may be printed and included in a paper filed application.

Secrecy Order 37 CFR 5.2

☐ Portions or all of the application associated with this Application Data Sheet may fall under a Secrecy Order pursuant to 37 CFR 5.2 (Paper filers only. Applications that fall under Secrecy Order may not be filed electronically.)

Inventor Information:

Inventor 1 Remove

Legal Name

Prefix	Given Name	Middle Name	Family Name	Suffix
	Gilbert		ROTA	

Residence Information (Select One) ○ US Residency ◉ Non US Residency ○ Active US Military Service

City	Vaux et Chantegrue	Country of Residence i	FR

Mailing Address of Inventor:

Address 1	8 rue Pre Jean		
Address 2			
City	Vaux et Chantegrue	**State/Province**	
Postal Code	F-25160	**Country** i	FR

Inventor 2 Remove

Legal Name

Prefix	Given Name	Middle Name	Family Name	Suffix
	Paul-Henri		VALLOTTON	

Residence Information (Select One) ○ US Residency ◉ Non US Residency ○ Active US Military Service

City	Pampigny	Country of Residence i	CH

Mailing Address of Inventor:

Address 1	Rue du Melley 22 C		
Address 2			
City	Pampigny	**State/Province**	
Postal Code	CH-1142	**Country** i	CH

All Inventors Must Be Listed - Additional Inventor Information blocks may be generated within this form by selecting the **Add** button. Add

Correspondence Information:

Application Data Sheet 37 CFR 1.76	Attorney Docket Number	5001-1489
	Application Number	
Title of Invention	INSTRUMENT FOR DRILLING DENTAL ROOT CANALS	

Enter either Customer Number or complete the Correspondence Information section below.
For further information see 37 CFR 1.33(a).

☐ **An Address is being provided for the correspondence Information of this application.**

Customer Number	00466		
Email Address	embon@young-thompson.com	Add Email	Remove Email

Application Information:

Title of the Invention	INSTRUMENT FOR DRILLING DENTAL ROOT CANALS		
Attorney Docket Number	5001-1489	**Small Entity Status Claimed**	☐
Application Type	Nonprovisional		
Subject Matter	Utility		
Total Number of Drawing Sheets (if any)	4	**Suggested Figure for Publication (if any)**	

Filing By Reference :

Only complete this section when filing an application by reference under 35 U.S.C. 111(c) and 37 CFR 1.57(a). Do not complete this section if application papers including a specification and any drawings are being filed. Any domestic benefit or foreign priority information must be provided in the appropriate section(s) below (i.e., "Domestic Benefit/National Stage Information" and "Foreign Priority Information").

For the purposes of a filing date under 37 CFR 1.53(b), the description and any drawings of the present application are replaced by this reference to the previously filed application, subject to conditions and requirements of 37 CFR 1.57(a).

Application number of the previously filed application	Filing date (YYYY-MM-DD)	Intellectual Property Authority or Country

Publication Information:

☐ Request Early Publication (Fee required at time of Request 37 CFR 1.219)

☐ **Request Not to Publish.** I hereby request that the attached application not be published under 35 U.S.C. 122(b) and certify that the invention disclosed in the attached application **has not and will not** be the subject of an application filed in another country, or under a multilateral international agreement, that requires publication at eighteen months after filing.

Representative Information:

Representative information should be provided for all practitioners having a power of attorney in the application. Providing this information in the Application Data Sheet does not constitute a power of attorney in the application (see 37 CFR 1.32).
Either enter Customer Number or complete the Representative Name section below. If both sections are completed the customer Number will be used for the Representative Information during processing.

Please Select One:	◉ Customer Number	○ US Patent Practitioner	○ Limited Recognition (37 CFR 11.9)
Customer Number	00466		

Application Data Sheet 37 CFR 1.76	Attorney Docket Number	5001-1489
	Application Number	
Title of Invention	INSTRUMENT FOR DRILLING DENTAL ROOT CANALS	

Domestic Benefit/National Stage Information:

This section allows for the applicant to either claim benefit under 35 U.S.C. 119(e), 120, 121, or 365(c) or indicate National Stage entry from a PCT application. Providing this information in the application data sheet constitutes the specific reference required by 35 U.S.C. 119(e) or 120, and 37 CFR 1.78.
When referring to the current application, please leave the application number blank.

Prior Application Status	Pending		Remove
Application Number	Continuity Type	Prior Application Number	Filing Date (YYYY-MM-DD)
	a 371 of international	PCT/IB2013/001191	2013-06-07

Additional Domestic Benefit/National Stage Data may be generated within this form by selecting the **Add** button. Add

Foreign Priority Information:

This section allows for the applicant to claim priority to a foreign application. Providing this information in the application data sheet constitutes the claim for priority as required by 35 U.S.C. 119(b) and 37 CFR 1.55(d). When priority is claimed to a foreign application that is eligible for retrieval under the priority document exchange program (PDX) [i] the information will be used by the Office to automatically attempt retrieval pursuant to 37 CFR 1.55(h)(1) and (2). Under the PDX program, applicant bears the ultimate responsibility for ensuring that a copy of the foreign application is received by the Office from the participating foreign intellectual property office, or a certified copy of the foreign priority application is filed, within the time period specified in 37 CFR 1.55(g)(1).

Remove

Application Number	Country [i]	Filing Date (YYYY-MM-DD)	Access Code [i] (if applicable)
PCT/IB2013/000108	IB	2013-01-30	

Additional Foreign Priority Data may be generated within this form by selecting the **Add** button. Add

Statement under 37 CFR 1.55 or 1.78 for AIA (First Inventor to File) Transition Applications

☐ This application (1) claims priority to or the benefit of an application filed before March 16, 2013 and (2) also contains, or contained at any time, a claim to a claimed invention that has an effective filing date on or after March 16, 2013.
NOTE: By providing this statement under 37 CFR 1.55 or 1.78, this application, with a filing date on or after March 16, 2013, will be examined under the first inventor to file provisions of the AIA.

Application Data Sheet 37 CFR 1.76	Attorney Docket Number	5001-1489
	Application Number	
Title of Invention	INSTRUMENT FOR DRILLING DENTAL ROOT CANALS	

Authorization to Permit Access:

☒ Authorization to Permit Access to the Instant Application by the Participating Offices

If checked, the undersigned hereby grants the USPTO authority to provide the European Patent Office (EPO), the Japan Patent Office (JPO), the Korean Intellectual Property Office (KIPO), the World Intellectual Property Office (WIPO), and any other intellectual property offices in which a foreign application claiming priority to the instant patent application is filed access to the instant patent application. See 37 CFR 1.14(c) and (h). This box should not be checked if the applicant does not wish the EPO, JPO, KIPO, WIPO, or other intellectual property office in which a foreign application claiming priority to the instant patent application is filed to have access to the instant patent application.

In accordance with 37 CFR 1.14(h)(3), access will be provided to a copy of the instant patent application with respect to: 1) the instant patent application-as-filed; 2) any foreign application to which the instant patent application claims priority under 35 U.S.C. 119(a)-(d) if a copy of the foreign application that satisfies the certified copy requirement of 37 CFR 1.55 has been filed in the instant patent application; and 3) any U.S. application-as-filed from which benefit is sought in the instant patent application.

In accordance with 37 CFR 1.14(c), access may be provided to information concerning the date of filing this Authorization.

Applicant Information:

Providing assignment information in this section does not substitute for compliance with any requirement of part 3 of Title 37 of CFR to have an assignment recorded by the Office.

Applicant 1 Remove

If the applicant is the inventor (or the remaining joint inventor or inventors under 37 CFR 1.45), this section should not be completed. The information to be provided in this section is the name and address of the legal representative who is the applicant under 37 CFR 1.43; or the name and address of the assignee, person to whom the inventor is under an obligation to assign the invention, or person who otherwise shows sufficient proprietary interest in the matter who is the applicant under 37 CFR 1.46. If the applicant is an applicant under 37 CFR 1.46 (assignee, person to whom the inventor is obligated to assign, or person who otherwise shows sufficient proprietary interest) together with one or more joint inventors, then the joint inventor or inventors who are also the applicant should be identified in this section.

Clear

◉ Assignee	○ Legal Representative under 35 U.S.C. 117	○ Joint Inventor
○ Person to whom the inventor is obligated to assign.	○ Person who shows sufficient proprietary interest	

If applicant is the legal representative, indicate the authority to file the patent application, the inventor is:

Name of the Deceased or Legally Incapacitated Inventor :

If the Applicant is an Organization check here. ☒

Organization Name	MAILLEFER INSTRUMENTS HOLDING SARL

Application Data Sheet 37 CFR 1.76	Attorney Docket Number	5001-1489
	Application Number	
Title of Invention	INSTRUMENT FOR DRILLING DENTAL ROOT CANALS	

Mailing Address Information:			
Address 1	Chemin du Verger 3		
Address 2			
City	Ballaigues	**State/Province**	
Country i	CH	Postal Code	CH-1338
Phone Number		Fax Number	
Email Address			

Additional Applicant Data may be generated within this form by selecting the Add button. Add

Assignee Information including Non-Applicant Assignee Information:

Providing assignment information in this section does not subsitute for compliance with any requirement of part 3 of Title 37 of CFR to have an assignment recorded by the Office.

Assignee 1

Complete this section if assignee information, including non-applicant assignee information, is desired to be included on the patent application publication . An assignee-applicant identified in the "Applicant Information" section will appear on the patent application publication as an applicant. For an assignee-applicant, complete this section only if identification as an assignee is also desired on the patent application publication.

Remove

If the Assignee or Non-Applicant Assignee is an Organization check here. ☐

Prefix	**Given Name**	Middle Name	**Family Name**	Suffix

Mailing Address Information For Assignee including Non-Applicant Assignee:			
Address 1			
Address 2			
City		**State/Province**	
Country i		Postal Code	
Phone Number		Fax Number	
Email Address			

Additional Assignee or Non-Applicant Assignee Data may be generated within this form by selecting the Add button. Add

Application Data Sheet 37 CFR 1.76	Attorney Docket Number	5001-1489
	Application Number	
Title of Invention	INSTRUMENT FOR DRILLING DENTAL ROOT CANALS	

Signature:

Remove

NOTE: This form must be signed in accordance with 37 CFR 1.33. See 37 CFR 1.4 for signature requirements and certifications					
Signature	/Benoit Castel/			Date (YYYY-MM-DD)	2015-06-12
First Name	Benoit	Last Name	Castel	Registration Number	35041
Additional Signature may be generated within this form by selecting the Add button.					Add

This collection of information is required by 37 CFR 1.76. The information is required to obtain or retain a benefit by the public which is to file (and by the USPTO to process) an application. Confidentiality is governed by 35 U.S.C. 122 and 37 CFR 1.14. This collection is estimated to take 23 minutes to complete, including gathering, preparing, and submitting the completed application data sheet form to the USPTO. Time will vary depending upon the individual case. Any comments on the amount of time you require to complete this form and/or suggestions for reducing this burden, should be sent to the Chief Information Officer, U.S. Patent and Trademark Office, U.S. Department of Commerce, P.O. Box 1450, Alexandria, VA 22313-1450. DO NOT SEND FEES OR COMPLETED FORMS TO THIS ADDRESS. **SEND TO: Commissioner for Patents, P.O. Box 1450, Alexandria, VA 22313-1450.**

Privacy Act Statement

The Privacy Act of 1974 (P.L. 93-579) requires that you be given certain information in connection with your submission of the attached form related to a patent application or patent. Accordingly, pursuant to the requirements of the Act, please be advised that: (1) the general authority for the collection of this information is 35 U.S.C. 2(b)(2); (2) furnishing of the information solicited is voluntary; and (3) the principal purpose for which the information is used by the U.S. Patent and Trademark Office is to process and/or examine your submission related to a patent application or patent. If you do not furnish the requested information, the U.S. Patent and Trademark Office may not be able to process and/or examine your submission, which may result in termination of proceedings or abandonment of the application or expiration of the patent.

The information provided by you in this form will be subject to the following routine uses:

1. The information on this form will be treated confidentially to the extent allowed under the Freedom of Information Act (5 U.S.C. 552) and the Privacy Act (5 U.S.C. 552a). Records from this system of records may be disclosed to the Department of Justice to determine whether the Freedom of Information Act requires disclosure of these records.

2. A record from this system of records may be disclosed, as a routine use, in the course of presenting evidence to a court, magistrate, or administrative tribunal, including disclosures to opposing counsel in the course of settlement negotiations.

3. A record in this system of records may be disclosed, as a routine use, to a Member of Congress submitting a request involving an individual, to whom the record pertains, when the individual has requested assistance from the Member with respect to the subject matter of the record.

4. A record in this system of records may be disclosed, as a routine use, to a contractor of the Agency having need for the information in order to perform a contract. Recipients of information shall be required to comply with the requirements of the Privacy Act of 1974, as amended, pursuant to 5 U.S.C. 552a(m).

5. A record related to an International Application filed under the Patent Cooperation Treaty in this system of records may be disclosed, as a routine use, to the International Bureau of the World Intellectual Property Organization, pursuant to the Patent Cooperation Treaty.

6. A record in this system of records may be disclosed, as a routine use, to another federal agency for purposes of National Security review (35 U.S.C. 181) and for review pursuant to the Atomic Energy Act (42 U.S.C. 218(c)).

7. A record from this system of records may be disclosed, as a routine use, to the Administrator, General Services, or his/her designee, during an inspection of records conducted by GSA as part of that agency's responsibility to recommend improvements in records management practices and programs, under authority of 44 U.S.C. 2904 and 2906. Such disclosure shall be made in accordance with the GSA regulations governing inspection of records for this purpose, and any other relevant (i.e., GSA or Commerce) directive. Such disclosure shall not be used to make determinations about individuals.

8. A record from this system of records may be disclosed, as a routine use, to the public after either publication of the application pursuant to 35 U.S.C. 122(b) or issuance of a patent pursuant to 35 U.S.C. 151. Further, a record may be disclosed, subject to the limitations of 37 CFR 1.14, as a routine use, to the public if the record was filed in an application which became abandoned or in which the proceedings were terminated and which application is referenced by either a published application, an application open to public inspections or an issued patent.

9. A record from this system of records may be disclosed, as a routine use, to a Federal, State, or local law enforcement agency, if the USPTO becomes aware of a violation or potential violation of law or regulation.

PTO/SB/08a (01-10)
Approved for use through 07/31/2012. OMB 0651-0031
U.S. Patent and Trademark Office; U.S. DEPARTMENT OF COMMERCE

INFORMATION DISCLOSURE STATEMENT BY APPLICANT

(Not for submission under 37 CFR 1.99)

Application Number	
Filing Date	2015-06-12
First Named Inventor	Gilbert ROTA
Art Unit	
Examiner Name	
Attorney Docket Number	5001-1489

U.S.PATENTS Remove

Examiner Initial*	Cite No	Patent Number	Kind Code[1]	Issue Date	Name of Patentee or Applicant of cited Document	Pages,Columns,Lines where Relevant Passages or Relevant Figures Appear
	1	7955078	B2	2011-06-07	Scianamblo	Cited in Specification

If you wish to add additional U.S. Patent citation information please click the Add button. Add

U.S.PATENT APPLICATION PUBLICATIONS Remove

Examiner Initial*	Cite No	Publication Number	Kind Code[1]	Publication Date	Name of Patentee or Applicant of cited Document	Pages,Columns,Lines where Relevant Passages or Relevant Figures Appear
	1	20060265858	A1	2006-11-30	McSpadden	Cited in ISR
	2	20050100859	A1	2005-05-12	Graybill et al.	Cited in ISR
	3	20050282109	A1	2005-12-22	Hagemann	Cited in ISR

If you wish to add additional U.S. Published Application citation information please click the Add button. Add

FOREIGN PATENT DOCUMENTS Remove

Examiner Initial*	Cite No	Foreign Document Number[3]	Country Code[2] ¡	Kind Code[4]	Publication Date	Name of Patentee or Applicant of cited Document	Pages,Columns,Lines where Relevant Passages or Relevant Figures Appear	T[5]
	1	102006007316	DE	A1	2007-08-30		Cited in ISR; English Language Abstract	☐

INFORMATION DISCLOSURE STATEMENT BY APPLICANT (Not for submission under 37 CFR 1.99)	Application Number	
	Filing Date	2015-06-12
	First Named Inventor	Gilbert ROTA
	Art Unit	
	Examiner Name	
	Attorney Docket Number	5001-1489

	2	1361831	EP	A1	2003-11-19		Cited in Specification; English Language Abstract	☐
If you wish to add additional Foreign Patent Document citation information please click the Add button							Add	

NON-PATENT LITERATURE DOCUMENTS Remove

Examiner Initials*	Cite No	Include name of the author (in CAPITAL LETTERS), title of the article (when appropriate), title of the item (book, magazine, journal, serial, symposium, catalog, etc), date, pages(s), volume-issue number(s), publisher, city and/or country where published.	T[5]
	1	International Search Report, dated September 13, 2013, from corresponding PCT application.	☐
If you wish to add additional non-patent literature document citation information please click the Add button			Add

EXAMINER SIGNATURE

Examiner Signature		Date Considered	

*EXAMINER: Initial if reference considered, whether or not citation is in conformance with MPEP 609. Draw line through a citation if not in conformance and not considered. Include copy of this form with next communication to applicant.

[1] See Kind Codes of USPTO Patent Documents at www.USPTO.GOV or MPEP 901.04. [2] Enter office that issued the document, by the two-letter code (WIPO Standard ST.3). [3] For Japanese patent documents, the indication of the year of the reign of the Emperor must precede the serial number of the patent document. [4] Kind of document by the appropriate symbols as indicated on the document under WIPO Standard ST.16 if possible. [5] Applicant is to place a check mark here if English language translation is attached.

INFORMATION DISCLOSURE STATEMENT BY APPLICANT (Not for submission under 37 CFR 1.99)	Application Number	
	Filing Date	2015-06-12
	First Named Inventor	Gilbert ROTA
	Art Unit	
	Examiner Name	
	Attorney Docket Number	5001-1489

CERTIFICATION STATEMENT

Please see 37 CFR 1.97 and 1.98 to make the appropriate selection(s):

☐ That each item of information contained in the information disclosure statement was first cited in any communication from a foreign patent office in a counterpart foreign application not more than three months prior to the filing of the information disclosure statement. See 37 CFR 1.97(e)(1).

OR

☐ That no item of information contained in the information disclosure statement was cited in a communication from a foreign patent office in a counterpart foreign application, and, to the knowledge of the person signing the certification after making reasonable inquiry, no item of information contained in the information disclosure statement was known to any individual designated in 37 CFR 1.56(c) more than three months prior to the filing of the information disclosure statement. See 37 CFR 1.97(e)(2).

☐ See attached certification statement.

☐ The fee set forth in 37 CFR 1.17 (p) has been submitted herewith.

☒ A certification statement is not submitted herewith.

SIGNATURE

A signature of the applicant or representative is required in accordance with CFR 1.33, 10.18. Please see CFR 1.4(d) for the form of the signature.

Signature	/Benoit Castel/	Date (YYYY-MM-DD)	2015-06-12
Name/Print	Benoit Castel	Registration Number	35041

This collection of information is required by 37 CFR 1.97 and 1.98. The information is required to obtain or retain a benefit by the public which is to file (and by the USPTO to process) an application. Confidentiality is governed by 35 U.S.C. 122 and 37 CFR 1.14. This collection is estimated to take 1 hour to complete, including gathering, preparing and submitting the completed application form to the USPTO. Time will vary depending upon the individual case. Any comments on the amount of time you require to complete this form and/or suggestions for reducing this burden, should be sent to the Chief Information Officer, U.S. Patent and Trademark Office, U.S. Department of Commerce, P.O. Box 1450, Alexandria, VA 22313-1450. DO NOT SEND FEES OR COMPLETED FORMS TO THIS ADDRESS. **SEND TO: Commissioner for Patents, P.O. Box 1450, Alexandria, VA 22313-1450.**

Privacy Act Statement

The Privacy Act of 1974 (P.L. 93-579) requires that you be given certain information in connection with your submission of the attached form related to a patent application or patent. Accordingly, pursuant to the requirements of the Act, please be advised that: (1) the general authority for the collection of this information is 35 U.S.C. 2(b)(2); (2) furnishing of the information solicited is voluntary; and (3) the principal purpose for which the information is used by the U.S. Patent and Trademark Office is to process and/or examine your submission related to a patent application or patent. If you do not furnish the requested information, the U.S. Patent and Trademark Office may not be able to process and/or examine your submission, which may result in termination of proceedings or abandonment of the application or expiration of the patent.

The information provided by you in this form will be subject to the following routine uses:

1. The information on this form will be treated confidentially to the extent allowed under the Freedom of Information Act (5 U.S.C. 552) and the Privacy Act (5 U.S.C. 552a). Records from this system of records may be disclosed to the Department of Justice to determine whether the Freedom of Information Act requires disclosure of these record s.

2. A record from this system of records may be disclosed, as a routine use, in the course of presenting evidence to a court, magistrate, or administrative tribunal, including disclosures to opposing counsel in the course of settlement negotiations.

3. A record in this system of records may be disclosed, as a routine use, to a Member of Congress submitting a request involving an individual, to whom the record pertains, when the individual has requested assistance from the Member with respect to the subject matter of the record.

4. A record in this system of records may be disclosed, as a routine use, to a contractor of the Agency having need for the information in order to perform a contract. Recipients of information shall be required to comply with the requirements of the Privacy Act of 1974, as amended, pursuant to 5 U.S.C. 552a(m).

5. A record related to an International Application filed under the Patent Cooperation Treaty in this system of records may be disclosed, as a routine use, to the International Bureau of the World Intellectual Property Organization, pursuant to the Patent Cooperation Treaty.

6. A record in this system of records may be disclosed, as a routine use, to another federal agency for purposes of National Security review (35 U.S.C. 181) and for review pursuant to the Atomic Energy Act (42 U.S.C. 218(c)).

7. A record from this system of records may be disclosed, as a routine use, to the Administrator, General Services, or his/her designee, during an inspection of records conducted by GSA as part of that agency's responsibility to recommend improvements in records management practices and programs, under authority of 44 U.S.C. 2904 and 2906. Such disclosure shall be made in accordance with the GSA regulations governing inspection of records for this purpose, and any other relevant (i.e., GSA or Commerce) directive. Such disclosure shall not be used to make determinations about individuals.

8. A record from this system of records may be disclosed, as a routine use, to the public after either publication of the application pursuant to 35 U.S.C. 122(b) or issuance of a patent pursuant to 35 U.S.C. 151. Further, a record may be disclosed, subject to the limitations of 37 CFR 1.14, as a routine use, to the public if the record was filed in an application which became abandoned or in which the proceedings were terminated and which application is referenced by either a published application, an application open to public inspections or an issued patent.

9. A record from this system of records may be disclosed, as a routine use, to a Federal, State, or local law enforcement agency, if the USPTO becomes aware of a violation or potential violation of law or regulation.

INTERNATIONAL SEARCH REPORT

International application No
PCT/IB2013/001191

A. CLASSIFICATION OF SUBJECT MATTER
INV. A61C5/02
ADD.

According to International Patent Classification (IPC) or to both national classification and IPC

B. FIELDS SEARCHED

Minimum documentation searched (classification system followed by classification symbols)
A61C

Documentation searched other than minimum documentation to the extent that such documents are included in the fields searched

Electronic data base consulted during the international search (name of data base and, where practicable, search terms used)

EPO-Internal, WPI Data

C. DOCUMENTS CONSIDERED TO BE RELEVANT

Category*	Citation of document, with indication, where appropriate, of the relevant passages	Relevant to claim No.
X	US 2006/265858 A1 (MCSPADDEN JOHN T [US]) 30 November 2006 (2006-11-30) paragraph [0037] paragraph [0043] paragraph [0044] figure 3G	1-9

A	US 2005/100859 A1 (GRAYBILL LONNIE M [US] ET AL) 12 May 2005 (2005-05-12) paragraph [0045] figures 1-4,10-14	1-9

A	DE 10 2006 007316 A1 (VDW GMBH [DE]) 30 August 2007 (2007-08-30) figures 3A-3E	1-9

	-/--	

[X] Further documents are listed in the continuation of Box C.

[X] See patent family annex.

* Special categories of cited documents :

"A" document defining the general state of the art which is not considered to be of particular relevance

"E" earlier application or patent but published on or after the international filing date

"L" document which may throw doubts on priority claim(s) or which is cited to establish the publication date of another citation or other special reason (as specified)

"O" document referring to an oral disclosure, use, exhibition or other means

"P" document published prior to the international filing date but later than the priority date claimed

"T" later document published after the international filing date or priority date and not in conflict with the application but cited to understand the principle or theory underlying the invention

"X" document of particular relevance; the claimed invention cannot be considered novel or cannot be considered to involve an inventive step when the document is taken alone

"Y" document of particular relevance; the claimed invention cannot be considered to involve an inventive step when the document is combined with one or more other such documents, such combination being obvious to a person skilled in the art

"&" document member of the same patent family

Date of the actual completion of the international search	Date of mailing of the international search report
6 September 2013	13/09/2013

Name and mailing address of the ISA/	Authorized officer
European Patent Office, P.B. 5818 Patentlaan 2 NL - 2280 HV Rijswijk Tel. (+31-70) 340-2040, Fax: (+31-70) 340-3016	Fortune, Bruce

1

Form PCT/ISA/210 (second sheet) (April 2005)

INTERNATIONAL SEARCH REPORT

International application No
PCT/IB2013/001191

C(Continuation). DOCUMENTS CONSIDERED TO BE RELEVANT

Category*	Citation of document, with indication, where appropriate, of the relevant passages	Relevant to claim No.
A	US 2005/282109 A1 (HAGEMANN FRANK [DE]) 22 December 2005 (2005-12-22) paragraph [0001] paragraph [0037] - paragraph [0043] figures 2-5 -----	1-9

1

Form PCT/ISA/210 (continuation of second sheet) (April 2005)

INTERNATIONAL SEARCH REPORT

Information on patent family members

International application No
PCT/IB2013/001191

Patent document cited in search report	Publication date	Patent family member(s)	Publication date
US 2006265858 A1	30-11-2006	NONE	
US 2005100859 A1	12-05-2005	US 2005100859 A1	12-05-2005
		WO 2006044545 A2	27-04-2006
DE 102006007316 A1	30-08-2007	NONE	
US 2005282109 A1	22-12-2005	AT 417566 T	15-01-2009
		DE 202004007925 U1	19-08-2004
		EP 1598027 A1	23-11-2005
		US 2005282109 A1	22-12-2005

Espacenet

Bibliographic data: DE102006007316 (A1) — 2007-08-30

Tooth root canal instrument for tooth root canal treatment and dressing of tooth root canal by dentist, has two units at support-sided end of root canal instrument, and are connected with supply canal

Inventor(s): LANKES KONRAD [DE]; BORGSCHULTE MARKUS [DE] ± (LANKES, KONRAD, ; BORGSCHULTE, MARKUS)

Applicant(s): VDW GMBH [DE] ± (VDW GMBH)

Classification: **- international:** *A61C3/00*
- cooperative: A61C5/023; A61C1/055

Application number: DE20061007316 20060216

Priority number(s): DE20061007316 20060216

Also published as: DE102006007316 (B4)

Abstract of DE102006007316 **(A1)**

The tooth root canal instrument has a unit for retaining the tooth root canal instrument in a drive device. Another unit is provided for supply of lubricating fluid or rinsing fluid or a compressed gas as compressed air and ozone. Both units are provided at the support-sided end of the root canal instrument and connected with a supply canal (3), which leads to the work area of an instrument part (2). An outlet is provided in the work area of the instrument part, which leads outwards from the supply canal.

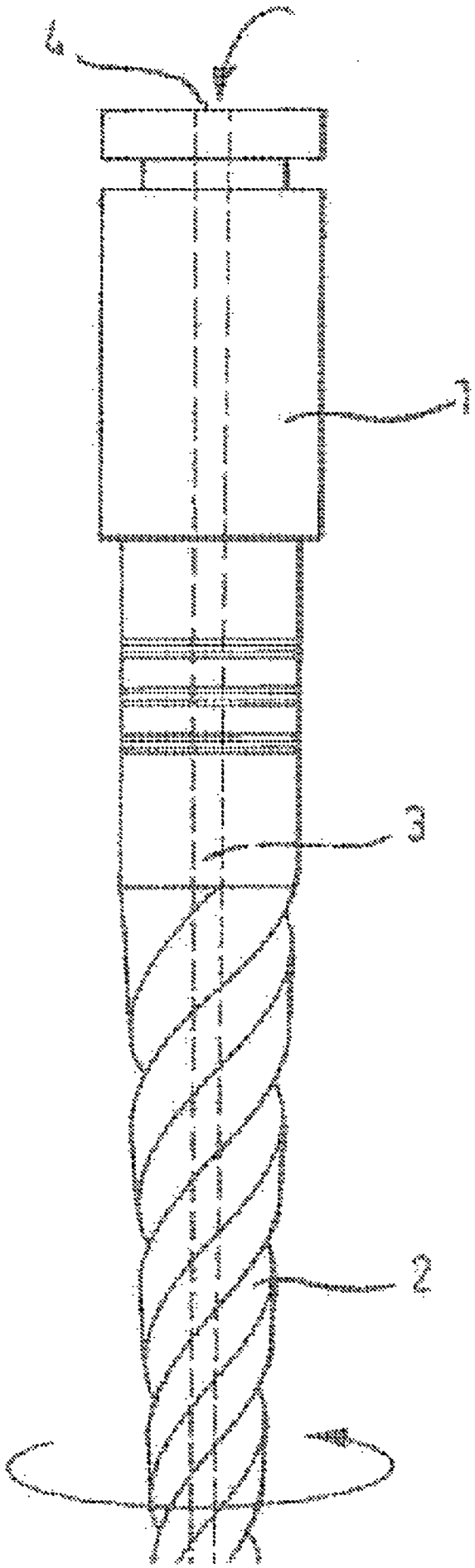
4
1
3
2

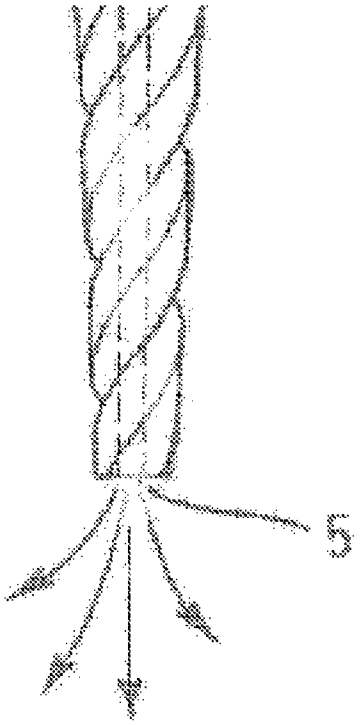
5

(19) Bundesrepublik Deutschland
Deutsches Patent- und Markenamt

(10) **DE 10 2006 007 316 A1** 2007.08.30

(12) # Offenlegungsschrift

(21) Aktenzeichen: **10 2006 007 316.9**
(22) Anmeldetag: **16.02.2006**
(43) Offenlegungstag: **30.08.2007**

(51) Int Cl.[8]: ***A61C 3/00*** (2006.01)

(71) Anmelder:
VDW GmbH, 81737 München, DE

(74) Vertreter:
Wilhelms, Kilian & Partner, 81541 München

(72) Erfinder:
Lankes, Konrad, 81829 München, DE;
Borgschulte, Markus, 81543 München, DE

(56) Für die Beurteilung der Patentfähigkeit in Betracht gezogene Druckschriften:
DE10 2004 053343 A1
DE 44 13 804 A1
DE 295 15 503 U1
DE 84 17 483 U1
DE 699 29 921 T2
CH 6 90 294 A5
US2004/02 19 482 A1
WO 04/0 58 089 A1
WO 99/63 902 A1

Die folgenden Angaben sind den vom Anmelder eingereichten Unterlagen entnommen

Prüfungsantrag gemäß § 44 PatG ist gestellt.

(54) Bezeichnung: **Zahnwurzelkanalinstrument**

(57) Zusammenfassung: Zahnwurzelkanalinstrument mit einem Halter (1) und einem daran angebrachten Instrumententeil (2). Am Ende des Halters (1) ist eine Einrichtung zum Aufnehmen des Zahnwurzelkanalinstrumentes in einer Drehantriebseinrichtung vorgesehen. Hier befindet sich auch eine Einrichtung zum Zu- und/oder Abführen von Spül- und/oder Schmiermittelflüssigkeiten bzw. Druckgas, die mit einem Zuführkanal (3) verbunden ist, der zum Arbeitsbereich des Instrumententeils (2) führt. In diesem Bereich ist wenigstens eine Austrittsöffnung (5) vorgesehen, die vom Zuführkanal (3) nach außen führt. Ein derartiges Zahnwurzelkanalinstrument kombiniert die mechanische und die chemische Aufbereitung eines Zahnwurzelkanals und ermöglicht eine schnelle Zahnwurzelkanalaufbereitung mit hoher Qualität.

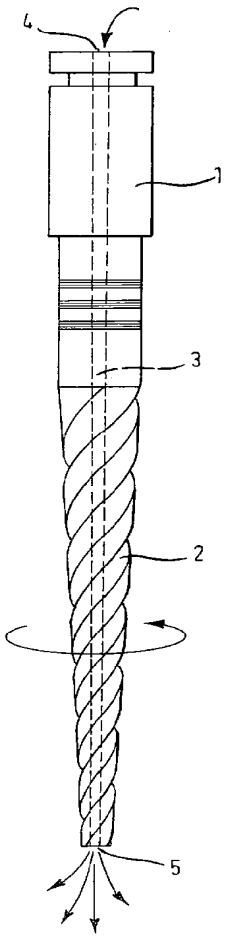

Beschreibung

[0001] Die Erfindung betrifft ein Zahnwurzelkanalinstrument mit einem Halter und einem daran angebrachten Instrumententeil.

[0002] Ein derartiges Zahnwurzelkanalinstrument wird vom Zahnarzt zur Zahnwurzelkanalbehandlung und insbesondere zur Aufbereitung des Zahnwurzelkanals eingesetzt.

[0003] Für eine erfolgreiche Zahnwurzelkanalbehandlung mit einem derartigen Zahnwurzelkanalinstrument ist die mechanische und chemische Reinigung des Zahnwurzelkanals unerlässlich.

[0004] Bisher wurde der maschinellen mechanischen Aufbereitung des Zahnwurzelkanals der Vorzug gegeben, in der Zwischenzeit besteht aber auch die Neigung, eine maschinell unterstützte chemische Reinigung einzusetzen.

[0005] Der Zeitaufwand einer Zahnwurzelkanalbehandlung ist nicht nur aus wirtschaftlichen Aspekten sondern indirekt auch für die Qualität der Zahnwurzelkanalbehandlung von besonderer Bedeutung. Bisher erfolgte eine mechanische und eine chemische Aufbereitung mit hohem Zeitaufwand für die chemische Reaktionszeit.

[0006] Die der Erfindung zugrunde liegende Aufgabe besteht demgegenüber darin, ein Zahnwurzelkanalinstrument der eingangs genannten Art zu schaffen, mit dem eine Zahnwurzelkanalaufbereitung in kürzerer Zeit und in hoher Qualität und damit eine erfolgreiche und wirtschaftliche Zahnwurzelkanalbehandlung möglich sind.

[0007] Diese Aufgabe wird gemäß der Erfindung durch ein Zahnwurzelka nalinstrument gelöst, das im Patentanspruch 1 angegeben ist.

[0008] Bei dem erfindungsgemäßen Zahnwurzelkanalinstrument ist die me chanische Aufbereitung mit der chemischen Aufbereitung kombiniert, wobei die Spülung zusätzlich dadurch verbessert worden ist, dass die Spüllösung erwärmt werden kann, eine Druckkontrolle möglich ist, ein gleichzeitiges Absaugen der Spülflüssigkeit erfolgen kann und damit ein optimaler Dentinspanabtrag und das Auflösen der so genannten Smear-Layers möglich sind.

[0009] In dieser Weise wird die oben angegebene Aufgabe gelöst.

[0010] Besonders bevorzugte Ausgestaltungen und Weiterbildungen des erfindungsgemäßen Zahnwurzelkanalinstrumentes sind Gegenstand der Patentansprüche 2 bis 8.

[0011] Im Folgenden werden anhand der zugehörigen Zeichnung besonders bevorzugte Ausführungsbeispiele des erfindungsgemäßen Zahnwurzelkanalinstrumentes näher beschrieben. Es zeigen

[0012] Fig. 1A bis Fig. 1C ein ersten Ausführungsbeispiel des erfindungsgemäßen Zahnwurzelkanalinstrumentes, wobei

[0013] Fig. 1A eine Seitenansicht des gesamten Instrumentes,

[0014] Fig. 1B eine perspektivische Ansicht eines Teils des Instrumententeils und

[0015] Fig. 1C eine Querschnittsansicht des Instrumententeils zeigen,

[0016] Fig. 2 in einer Schnittansicht die Benutzung des **Fig.** 1 dargestellten Zahnwurzelkanalinstrumentes im Zahnwurzelkanal,

[0017] Fig. 3A bis Fig. 3E in Schnittansichten verschiedene Ausführungsbeispiele des Flüssigkeitszuführkanals und

[0018] Fig. 4 ein weiteres Ausführungsbeispiel des erfindungsgemäßen Zahnwurzelkanalinstrumentes in einer Seitenansicht.

[0019] Das in Fig. 1A bis Fig. 1C dargestellte Ausführungsbeispiel des erfindungsgemäßen Zahnwurzelkanalinstrumentes umfasst im Wesentlichen einen Halter **1** und einen daran angebrachten Instrumententeil **2**.

[0020] Am halterseitigen Ende des Zahnwurzelkanalinstrumentes, d.h. am oberen Ende des Halters **1** ist eine Einrichtung vorgesehen, mit der das Zahnwurzelkanalinstrument in einer Drehantriebseinrichtung aufgenommen werden kann, bei der es sich um eine elektrische oder druckluftbetriebene Antriebsvorrichtung handeln kann.

[0021] Als Antriebseinrichtung kommt auch ein das Instrument in Ultraschallschwingungen versetzender Antrieb, z.B. ein piezoelektrischer oder magnetostriktiver Antrieb in Frage.

[0022] Weiterhin ist am halterseitigen Ende des Zahnwurzelkanalinstrumentes eine Zu- und/oder Abführung **4** zum Zu- und Abführen von Spül- und/oder Schmiermittelflüssigkeiten vorgesehen, die über einen Zuführkanal **3** zum Arbeitsbereich des Instrumententeils **2** führt, wie es durch Pfeile in Fig. 1A wiedergegeben ist. Am unteren Ende des Instrumententeils befindet sich eine weitere Öffnung **5**, die vom Zuführkanal **3** nach außen führt und als Austrittsöffnung für die zugeführte Flüssigkeit dient.

[0023] Wie es in Fig. 1B und Fig. 1C im Einzelnen dargestellt ist, kann das Zahnwurzelkanalinstrument hohl ausgebildet sein, so dass der Zuführkanal **3** aus dem Hohlraum im Zahnwurzelkanalinstrument besteht.

[0024] Über den Zuführkanal **3** können somit Flüssigkeiten zwischen der Öffnung **4** am halterseitigen Ende und der Öffnung **5** am instrumentenseitigen Ende transportiert werden. Dieser Zuführkanal **3** kann aber auch zum Transport eines Druckgases, z.B. Druckluft, Ozon oder dergleichen verwendet werden.

[0025] Wie es in Fig. 2 dargestellt ist, wird beim Arbeiten mit dem in **Fig.** 1 dargestellten Zahnwurzelkanalinstrument dieses am halterseitigen Ende in eine Drehantriebseinrichtung eingesetzt und gedreht. Die Öffnung **4** am halterseitigen Ende wird mit einer Spül- und/oder Schmiermittelflüssigkeitszuführeinrichtung verbunden, die beispielsweise eine Pumpe aufweist.

[0026] Während das Zahnwurzelkanalinstrument durch die Drehantriebseinrichtung gedreht wird, wird Spül- und/oder Schmiermittelflüssigkeit über den Zuführkanal **3** zum Instrumententeil **2** befördert, wo diese Flüssigkeit an der Öffnung **5** am instrumentenseitigen Ende wieder austritt.

[0027] Wie es in den Fig. 3A bis Fig. 3E dargestellt ist, kann der Zuführkanal **3** in verschiedener Weise ausgebildet sein. Die Fig. 3A bis Fig. 3E zeigen die verschiedenen Möglichkeiten der Ausbildung des Zuführkanals **3** jeweils in Schnittansichten.

[0028] Wie es in Fig. 3A dargestellt ist, kann der Instrumententeil hohl ausgebildet sein, wobei der Zuführkanal in der dargestellten Weise exzentrisch vorgesehen sein kann.

[0029] Bei einem Instrumententeil **2** mit dreieckigem Querschnitt kann der Zuführkanal **3** in Form einer zentralen Bohrung gleich beabstandet von allen drei Dreieckseiten vorgesehen sein, wie es in Fig. 3B dargestellt ist.

[0030] Wie es in Fig. 3C dargestellt ist, können auch zwei parallele Kanäle vorgesehen sein, von denen der eine den Transport von Flüssigkeiten von der halterseitigen Öffnung **4** zur instrumentenseitigen Öffnung **5** ermöglicht und der zweite Kanal für den entsprechenden Rücktransport der Flüssigkeiten von der instrumentenseitigen Öffnung **5** zur halterseitigen Öffnung **4** sorgt.

[0031] Obwohl in der Zeichnung und insbesondere in **Fig.** 1 die Öffnung **5** zum Abführen der Flüssigkeiten am instrumentenseitigen Ende dargestellt ist, kann diese Öffnung auch im Spanraum des Instrumententeils vorgesehen sein.

[0032] Vorzugsweise besteht der Instrumententeil aus einem Metallmaterial, einer Metalllegierung, aus Kunststoff oder Kombinationen aus diesen Materialien, z.B. Edelstahl, NiTi, einem Keramikmaterial mit oder ohne Beschichtung.

[0033] Fig. 4 zeigt ein Ausführungsbeispiel des erfindungsgemäßen Zahnwurzelkanalinstrumentes, bei dem mehrere Öffnungen zum Abführen von Flüssigkeiten axial im Abstand voneinander im Spanraum am Instrumententeil vorgesehen sind.

[0034] Bei dem in Fig. 4 dargestellten Ausführungsbeispiel ist durch Doppelpfeile am halterseitigen Ende angedeutet, dass die Spülflüssigkeit zum Spülen zugeführt und/oder abgepumpt werden kann.

Patentansprüche

1. Zahnwurzelkanalinstrument mit einem Halter und einem daran angebrachten Instrumententeil, **dadurch gekennzeichnet**, dass am halterseitigen Ende des Zahnwurzelkanalinstrumentes eine Einrichtung zum Aufnehmen des Zahnwurzelkanalinstrumentes in einer Antriebseinrichtung und eine Einrichtung zum Zu- und/oder Abführen von Spül- und/oder Schmiermittelflüssigkeit oder eines Druckgases wie Druckluft, Ozon und dergleichen vorgesehen sind, die mit einem Zuführkanal verbunden sind, der zum Arbeitsbereich des Instrumententeils führt, und im Arbeitsbereich des Instrumententeils wenigstens eine Austrittsöffnung vorgesehen ist, die vom Zuführkanal nach außen führt.

2. Zahnwurzelkanalinstrument nach Anspruch 1, dadurch gekennzeichnet, dass die Antriebseinrichtung ein Drehantrieb ist.

3. Zahnwurzelkanalinstrument nach Anspruch 1 oder 2, dadurch gekennzeichnet, dass die Drehantriebseinrichtung eine elektrisch oder druckluftbetriebene Einrichtung ist.

4. Zahnwurzelkanalinstrument nach Anspruch 1, 2 oder 3, dadurch gekennzeichnet, dass es innen hohl ausgebildet ist.

5. Zahnwurzelkanalinstrument nach Anspruch 4, dadurch gekennzeichnet, dass es innen zwei Hohlkanäle aufweist.

6. Zahnwurzelkanalinstrument nach einem der vorhergehenden Ansprüche, dadurch gekennzeichnet, dass die Austrittsöffnung am instrumentenseitigen Ende des Instrumententeils vorgesehen ist.

7. Zahnwurzelkanalinstrument nach einem der Ansprüche 1 bis 5, dadurch gekennzeichnet, dass die Austrittsöffnung im Bereich des Spanraumes des Instrumententeils vorgesehen ist.

8. Zahnwurzelkanalinstrument nach einem der Ansprüche 1 bis 5, dadurch gekennzeichnet, dass mehrere Austrittsöffnungen axial im Abstand voneinander am Instrumententeil vorgesehen sind.

Es folgen 6 Blatt Zeichnungen

Anhängende Zeichnungen

FIG. 1A

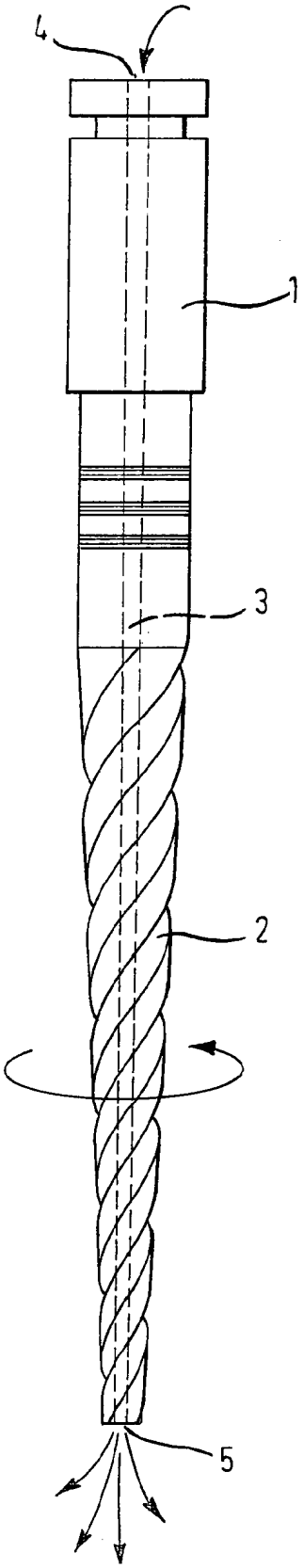

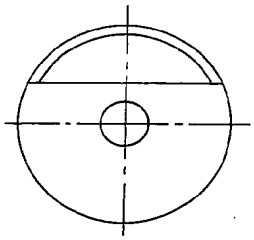

FIG. 1B

FIG. 1C

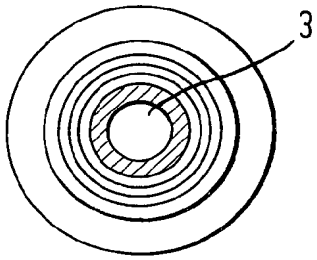

FIG. 2

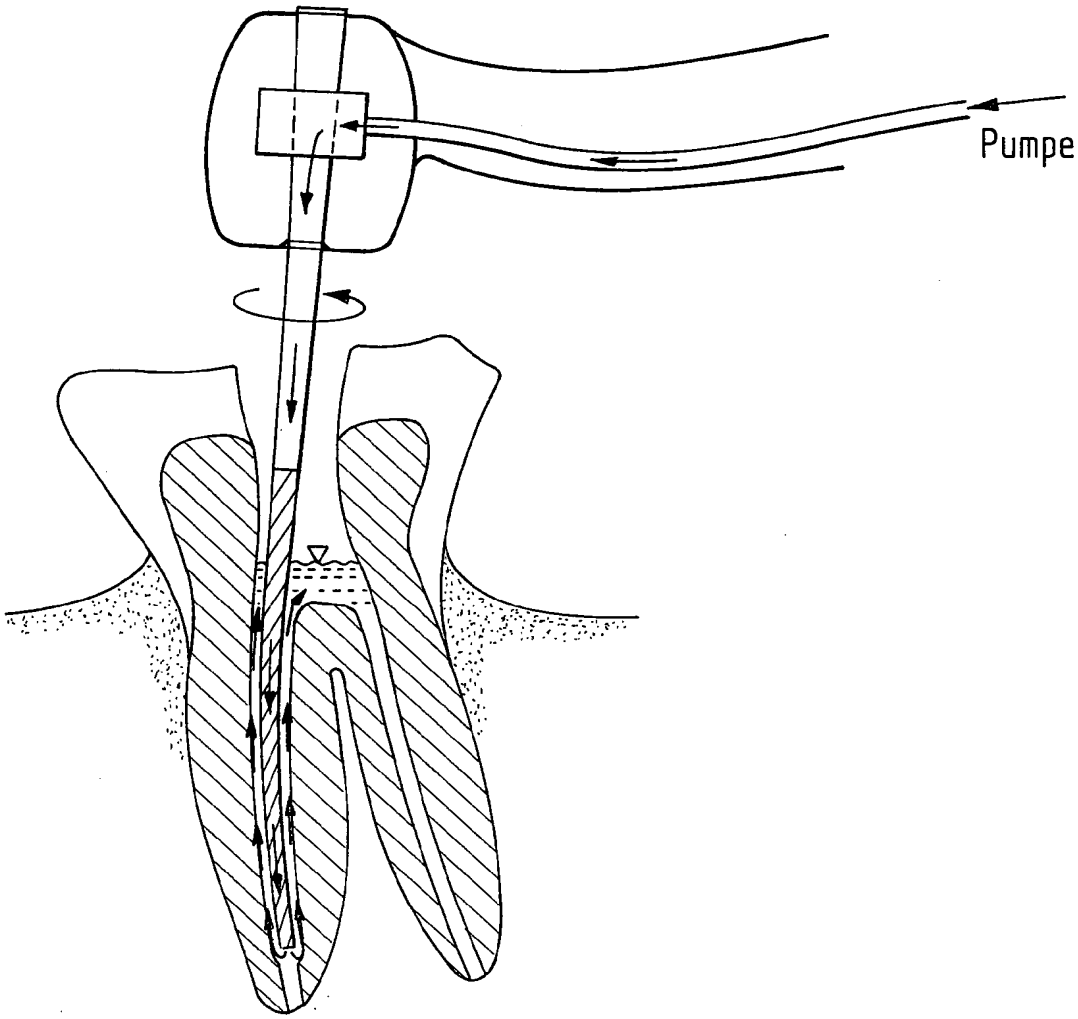

FIG. 3A

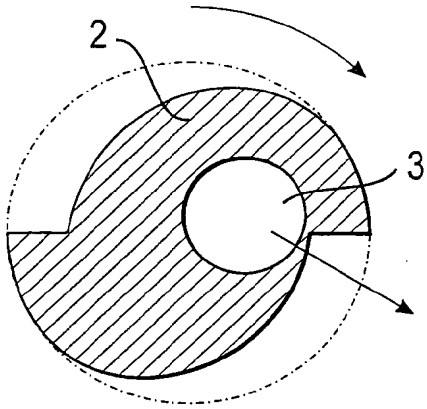

FIG. 3B

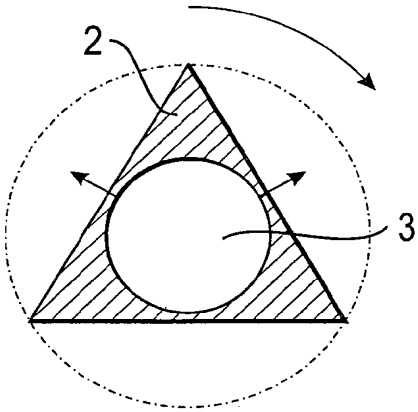

FIG. 3C

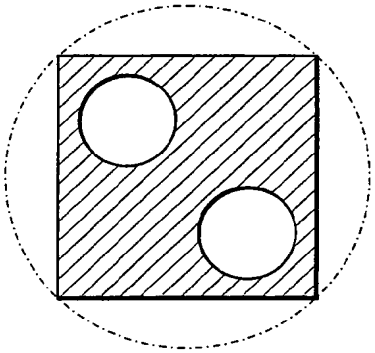

FIG. 3D

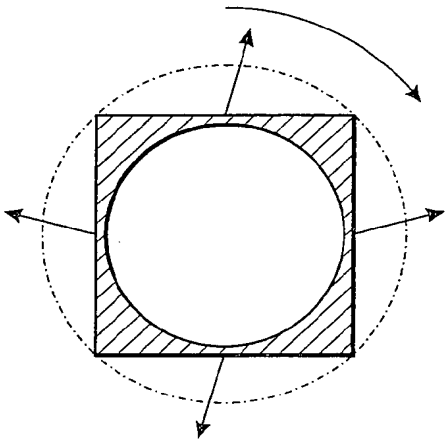

FIG. 3E

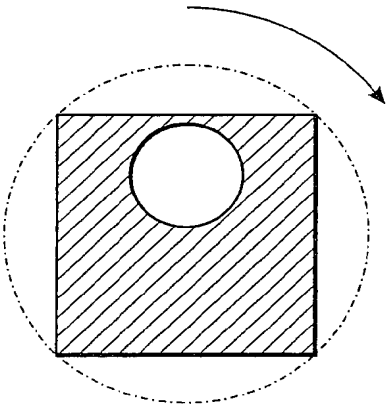

FIG. 4

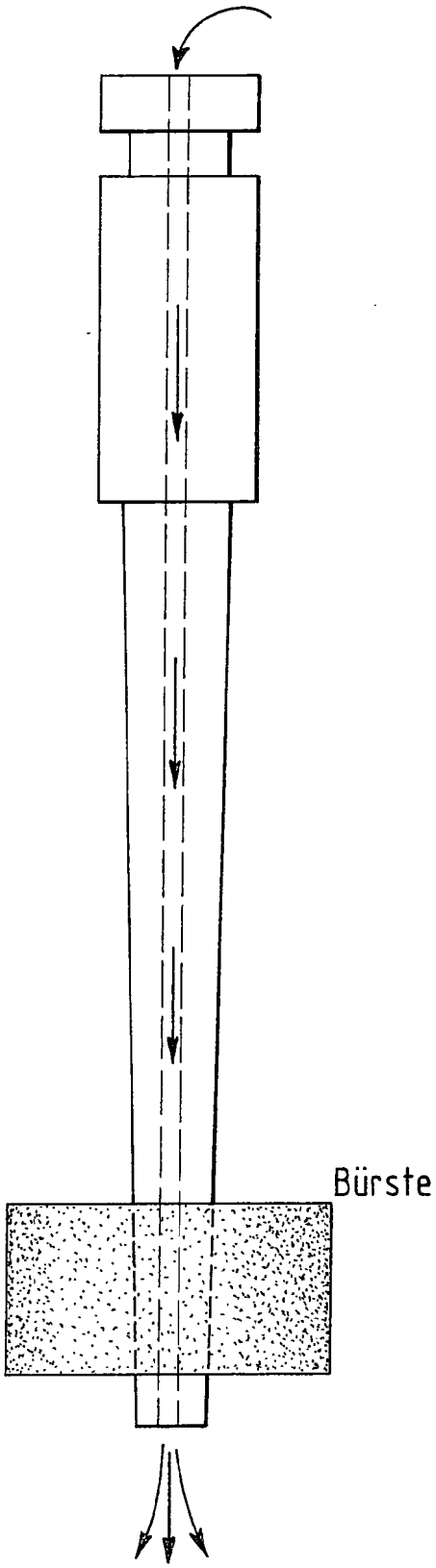

FIG. 5

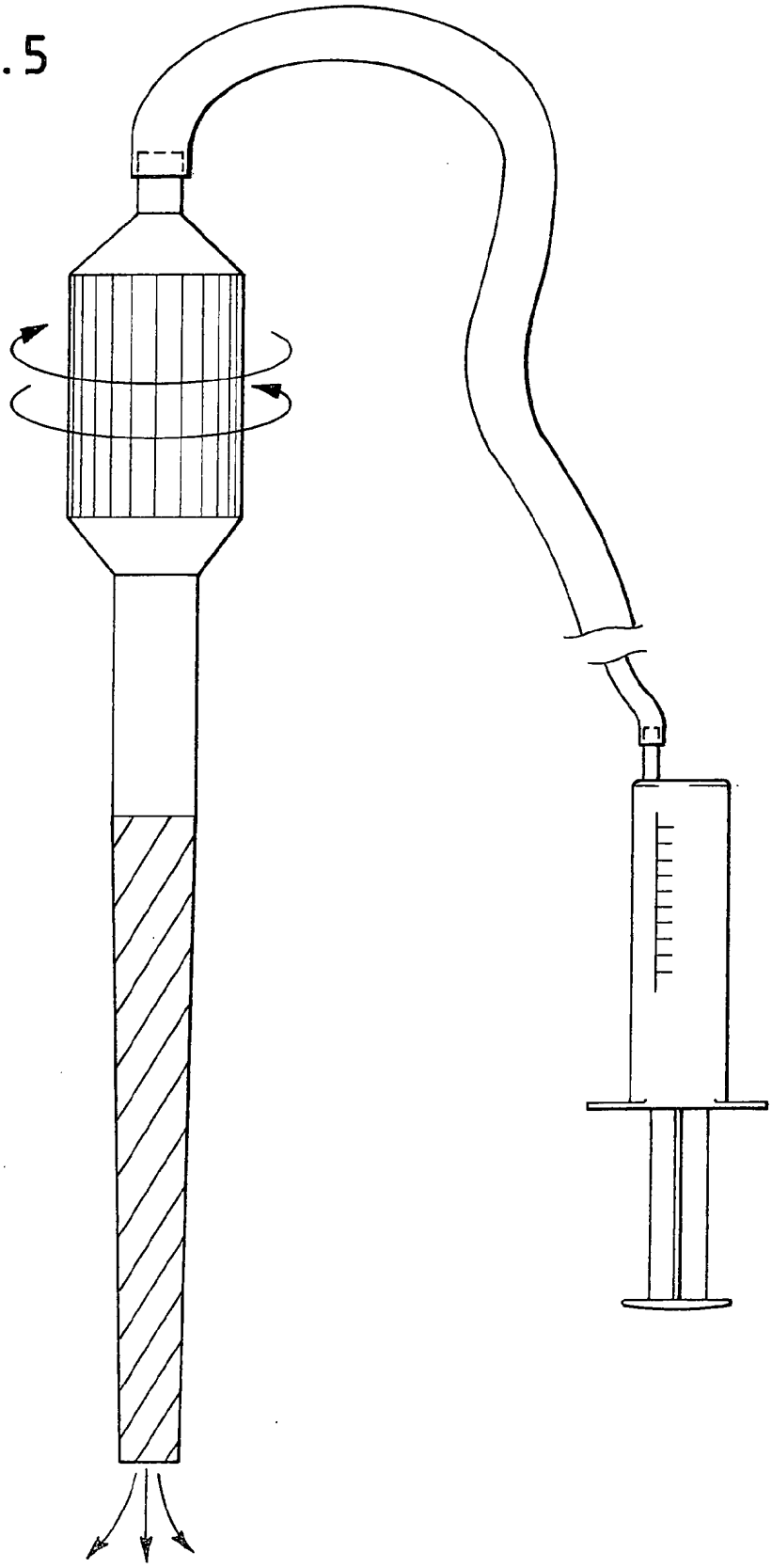

FIG. 6

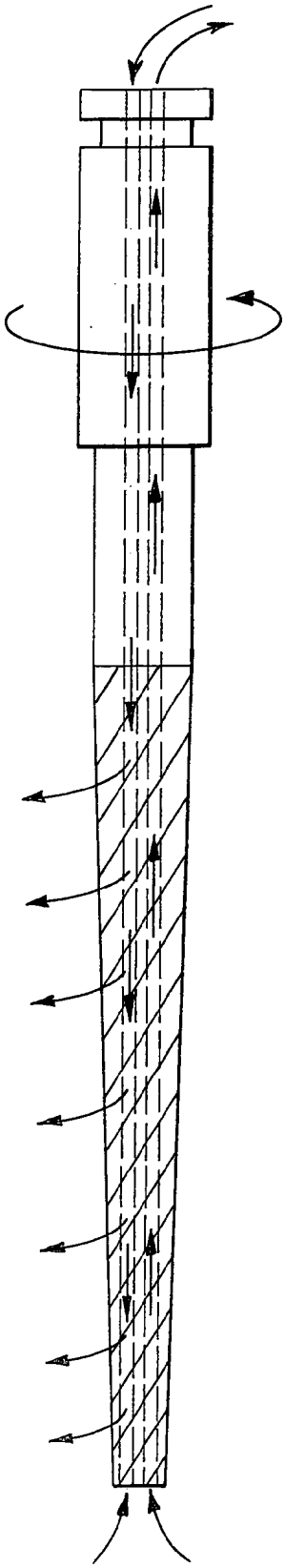

Espacenet

Bibliographic data: EP1361831 (A1) — 2003-11-19

DRILLING INSTRUMENT, IN PARTICULAR FOR DRILLING DENTAL ROOT CANALS

Inventor(s): ROUILLER JEAN-CLAUDE [CH]; BREGUET OLIVIER [CH] ± (ROUILLER, JEAN-CLAUDE, ; BREGUET, OLIVIER)

Applicant(s): ROUILLER JEAN CLAUDE [CH] ± (ROUILLER, JEAN-CLAUDE)

Classification: **- international:** ***A61B17/16; A61C5/02; B23C5/10;*** (IPC1-7): A61B17/16; A61C5/02; B23C5/10
- cooperative: **A61B17/1615**; **A61C5/023**; **B23C5/10**; B23C2210/088; B23C2210/402; B23C2265/08; B23C2265/32; Y10T408/9097

Application number: EP20020710745 20020219

Priority number(s): WO2002CH00098 20020219 ; FR20010002452 20010220

Also published as: EP1361831 (B1) FR2821000 (A1) FR2821000 (B1) AT367775 (T) JP2004522532 (A) more

Abstract not available for EP1361831 (A1)
Abstract of corresponding document: FR2821000 (A1)

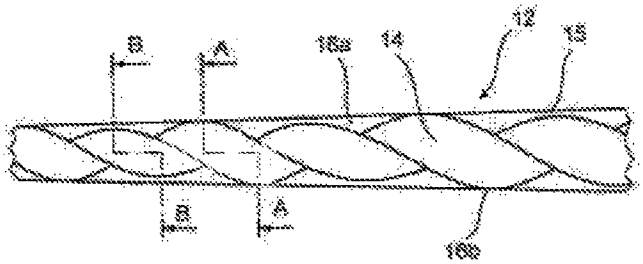

The invention concerns a drilling instrument (10), in particular for drilling dental root canals comprising a base (11) and a guide section (13) as well as a polygonal cutting section (12). Said cutting section includes several helical cutting edges (17) defining an envelope (15). The flutes (14), which are the surfaces linking the cutting edges, are cut out such that part of them define clearance zones (16a) alternately arranged between the drilling zones (16b). In the central part of a clearance zone (16a), the cutting edges (17) are all arranged recessed inside the envelope (15), in the central part of the drilling zone (16b), said cutting edges are all arranged on the envelope, and in a zone intermediate between a clearance zone (16a) and an adjacent drilling zone (16b), at least one

cutting edge is on the envelope and at least one cutting edge is recessed inside the envelope.

(19) Europäisches Patentamt
European Patent Office
Office européen des brevets

(11) Veröffentlichungsnummer:
(11) Publication number:
(11) Numéro de publication:

EP 1 361 831 A0

Internationale Anmeldung veröffentlicht durch die Weltorganisation für geistiges Eigentum unter der Nummer:

WO 02/065938 (art. 158 des EPÜ).

International application published by the World Intellectual Property Organisation under number:

WO 02/065938 (art. 158 of the EPC).

Demande internationale publiée par l'Organisation Mondiale de la Propriété sous le numéro:

WO 02/065938 (art. 158 de la CBE).

PATENT
5001-1489

IN THE U.S. PATENT AND TRADEMARK OFFICE

In re application of

Gilbert ROTA et al. Conf.

Application No. **NEW NATIONAL PHASE** Group

Filed June 12, 2015 Examiner

INSTRUMENT FOR BORING DENTAL ROOT CANALS

PRELIMINARY AMENDMENT

Assistant Commissioner for Patents June 12, 2015
P.O. Box 1450
Alexandria, VA 22313-1450

Sir:

The following preliminary amendments and remarks are respectfully submitted in connection with the above-identified application.

Amendments to the Specification begin on page 2 of this paper.

Amendments to the Claims are reflected in the listing of claims which begin on page 3 of this paper.

Remarks begin on page 8 of this paper.

An **Appendix** is attached following the signature page of this paper.

AMENDMENTS TO THE SPECIFICATION:

Please cancel the originally-filed title and add the accompanying new title as follows:

--INSTRUMENT FOR DRILLING DENTAL ROOT CANALS--

Please cancel the originally-filed Abstract of the Disclosure, and add the accompanying new Abstract of the Disclosure which appears on a separate sheet in the Appendix.

AMENDMENTS TO THE CLAIMS:

If the present amendment is a preliminary amendment filed in the National Stage of a PCT application, the US DO/EO is directed NOT to enter any claim amendment made under Article 19 or Article 34 during prosecution of the International Stage of this application.

This listing of claims which follows on the next page will replace all prior versions, and listings of claims in the application:

LISTING OF CLAIMS:

1. (original) Instrument for drilling dental root canals comprising a tapered rod (1) having over at least a part of its length - the active part (1b) - a polygonal cross-section (4) forming at least two cutting edges (5a, 5b; 52, 54), said active part (1b) terminating by a point (3) and being defined by an envelope (7) of a cylindrical or conical shape, the longitudinal axis of which coincides with the axis of rotation (R) of the instrument, characterised in that said active part (1b) has a first portion (1c) extending from the point (3) and a second portion (1d) extending following the first portion (1c) towards the rear of the active part (1b); by the fact that any cross-section (4a; 4'a; 40a) of the first portion (1c) has a centre of mass (ma; m'a m40a) located on the axis of rotation (R) and that said at least two cutting edges (5a, 5b; 52, 54) defined by said cross-section (4a; 4'a; 40a) are located on the envelope (7); and by the fact that at least one cross-section (4b; 4'b; 401b) of the second portion (1d) has a centre of mass (mb; m'b m401b) offset with respect to the axis of rotation (R) and at least one cutting edge (5a; 52, 54) defined by said cross-section (4b; 4'b; 401b) is located set back within the envelope (7).

2. (original) Instrument as claimed in claim 1, characterised in that any cross-section (4b; 4'b) of the second portion (1d) has a centre of mass (mb; m'b) offset with respect to the axis of rotation (R) and at least one cutting edge (5a) defined by said cross-section (4b; 4'b) is located set back within the envelope (7).

3. (original) Instrument as claimed in claim 2, characterised in that exactly one cutting edge (5a) defined by any cross-section (4b) of the second portion (1d) of the active part (1b) is located on the envelope (7).

4. (currently amended) Instrument as claimed in claim 2 ~~any one of claims 2 or 3~~, characterised in that a cross-section (4b) of the second portion (1d) of the active part (1b) located close to the point (3) has a centre of mass (mb) proportionally closer to the axis of rotation (R) than the centre of mass of a cross-section of said second portion (1d) located at the rear of the active part (1b).

5. (original) Instrument as claimed in claim 1, characterised in that the second portion (1d) has an alternating arrangement of centred zones (12) in which any cross-section (402b) has a centre of mass (m402b) on the axis of rotation (R) and said at least two cutting edges (52, 54) defined by

said cross-section (402b) are located on the envelope (7) and off-centre zones (11) in which any cross-section (401b) has a centre of mass (m401b) offset with respect to said axis of rotation (R) and at least one cutting edge (52, 54) defined by said cross-section (401b) is located set back within the envelope (7).

6. (original) Instrument as claimed in claim 5, characterised in that the off-centre zones (11) alternate between first zones in which for any cross-section (401b) a first (52) of the at least two cutting edges (52, 54) defined by said cross-section is located set back within the envelope (7) while the second (54) of the at least two cutting edges is located on the envelope (7) and second zones in which for any cross-section, the second (54) of the at least two cutting edges (52) defined by said cross-section is located set back within the envelope (7) while the first (52) is located on the envelope (7).

7. (currently amended) Instrument as claimed in claim 1 ~~any one of the preceding claims~~, characterised in that the active part (1b) has over its whole length a polygonal cross-section with straight sides.

8. (currently amended) Instrument as claimed in claim 1 ~~any one of the preceding claims~~, characterised in that the first portion (1c) of the active part (1b) has a square cross-section and that the second portion (1d) of the active part has a rectangular cross-section.

9. (currently amended) Instrument as claimed in claim 1 ~~any one of the preceding claims~~, characterised in that the first portion (1c) of the active part (1b) has a length between 1 and 3 millimetres.

10. (new) Instrument as claimed in claim 3, characterised in that a cross-section (4b) of the second portion (1d) of the active part (1b) located close to the point (3) has a centre of mass (mb) proportionally closer to the axis of rotation (R) than the centre of mass of a cross-section of said second portion (1d) located at the rear of the active part (1b).

REMARKS

Claims 1-10 remain in this application. Claims 4 and 7-9 have been amended. New claim 10 has been added. No new matter has been added.

The original abstract has been deleted, and a new abstract has been added.

Entry of the above amendments is earnestly solicited. An early and favorable first action on the merits is earnestly requested.

Should there be any matters that need to be resolved in the present application, the Examiner is respectfully requested to contact the undersigned at the telephone number listed below.

The Commissioner is hereby authorized in this, concurrent, and future submissions, to charge any underpayment or credit any overpayment to Deposit Account No. 25-0120 for any additional fees required under 37 C.F.R. § 1.16 or under 37 C.F.R. § 1.17.

Respectfully submitted,

YOUNG & THOMPSON

/Benoît Castel/

Benoît Castel, Reg. No. 35,041
Customer No. 00466
209 Madison Street, Suite 500
Alexandria, VA 22314
Telephone (703) 521-2297
Facsimile (703) 685-0573
(703) 979-4709

BC/nmb

APPENDIX:

The Appendix includes the following item(s):

☒ - a new Abstract of the Disclosure

ABSTRACT

An instrument for drilling dental root canals includes a tapered rod having over at least a part of its length - the active part - a polygonal cross-section forming at least two cutting edges, the active part terminating by a point and being defined by an envelope of cylindrical or conical shape, whose longitudinal axis coincides with the instrument's axis of rotation. The active part has a first portion extending from the point and a second portion extending following the first portion towards the rear of the active part. At least one cross-section of the first portion has a centre of mass located on the axis of rotation and the cutting edges are located on the envelope. Any cross-section of the second portion has a centre of mass offset with respect to the axis of rotation and at least one cutting edge defined by the cross-section is located set back.

(12) DEMANDE INTERNATIONALE PUBLIÉE EN VERTU DU TRAITÉ DE COOPÉRATION EN MATIÈRE DE BREVETS (PCT)

VERSION CORRIGÉE

(19) Organisation Mondiale de la Propriété Intellectuelle
Bureau international

(43) Date de la publication internationale
7 août 2014 (07.08.2014)

WIPO | PCT

(10) Numéro de publication internationale
WO 2014/118591 A8

(51) Classification internationale des brevets : *A61C 5/02* (2006.01)

(21) Numéro de la demande internationale : PCT/IB2013/001191

(22) Date de dépôt international : 7 juin 2013 (07.06.2013)

(25) Langue de dépôt : français

(26) Langue de publication : français

(30) Données relatives à la priorité : PCT/IB2013/000108 30 janvier 2013 (30.01.2013) IB

(71) Déposant : **MAILLEFER INSTRUMENTS HOLDING SARL** [CH/CH]; Chemin du Verger 3, CH-1338 Ballaigues (CH).

(72) Inventeurs : **ROTA, Gilbert**; 8 rue Pré Jean, F-25160 Vaux et Chantegrue (FR). **VALLOTTON, Paul-Henri**; Rue du Melley 22 C, CH-1142 Pampigny (CH).

(74) Mandataire : **MICHELI & CIE SA**; 122, rue de Genève, C.P. 61, CH-1226 Thônex (CH).

(81) États désignés *(sauf indication contraire, pour tout titre de protection nationale disponible)* : AE, AG, AL, AM, AO, AT, AU, AZ, BA, BB, BG, BH, BN, BR, BW, BY, BZ, CA, CH, CL, CN, CO, CR, CU, CZ, DE, DK, DM, DO, DZ, EC, EE, EG, ES, FI, GB, GD, GE, GH, GM, GT, HN, HR, HU, ID, IL, IN, IS, JP, KE, KG, KN, KP, KR, KZ, LA, LC, LK, LR, LS, LT, LU, LY, MA, MD, ME, MG, MK, MN, MW, MX, MY, MZ, NA, NG, NI, NO, NZ, OM, PA, PE, PG, PH, PL, PT, QA, RO, RS, RU, RW, SC, SD, SE, SG, SK, SL, SM, ST, SV, SY, TH, TJ, TM, TN, TR, TT, TZ, UA, UG, US, UZ, VC, VN, ZA, ZM, ZW.

(84) États désignés *(sauf indication contraire, pour tout titre de protection régionale disponible)* : ARIPO (BW, GH, GM, KE, LR, LS, MW, MZ, NA, RW, SD, SL, SZ, TZ, UG, ZM, ZW), eurasien (AM, AZ, BY, KG, KZ, RU, TJ, TM), européen (AL, AT, BE, BG, CH, CY, CZ, DE, DK, EE, ES, FI, FR, GB, GR, HR, HU, IE, IS, IT, LT, LU, LV, MC, MK, MT, NL, NO, PL, PT, RO, RS, SE, SI, SK, SM, TR), OAPI (BF, BJ, CF, CG, CI, CM, GA, GN, GQ, GW, KM, ML, MR, NE, SN, TD, TG).

Publiée :

— *avec rapport de recherche internationale (Art. 21(3))*

(48) Date de publication de la présente version corrigée : 16 octobre 2014

(15) Renseignements relatifs à la correction : voir la Notice du 16 octobre 2014

(54) Title : INSTRUMENT FOR BORING DENTAL ROOT CANALS

(54) Titre : INSTRUMENT POUR L'ALESAGE DES CANAUX RADICULAIRES DENTAIRES

Fig.1

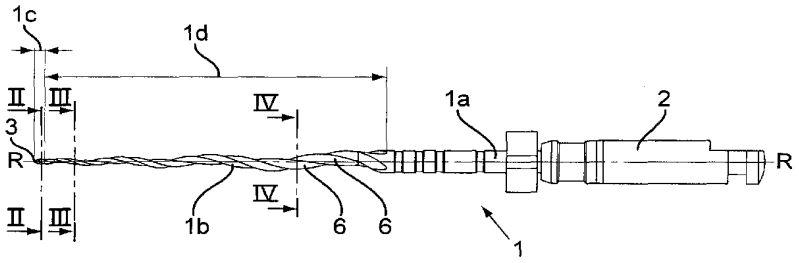

(57) Abstract : The invention relates to an instrument for boring dental root canals, comprising a thin rod (1) having, at least over part of the length thereof, a polygonal section (4) forming at least two cutting edges (5a, 5b) ending in a tip (3). Said length of the instrument has a first portion (1c) extending from the tip (3) and a second portion (1d) following on from the first portion (1c). At least one section (4a) of the first portion (1c) has a centre of mass (ma) located on the rotational axis. Every section (4b) of the second portion (1d) has a centre of mass (mb) that is offset in relation to the rotational axis and at least one cutting edge (5a) defined by said section (4b) is set back.

(57) Abrégé : Instrument pour l'alésage des canaux radiculaires dentaires comprenant une tige effilée (1) présentant sur au moins une partie de sa longueur, une section polygonale (4) formant au moins deux arêtes de coupe (5a, 5b) se terminant par une pointe (3). Ladite longueur de l'instrument comporte une première portion (1c) s'étendant depuis la pointe (3) et une seconde portion (1d) s'étendant à la suite de la première portion (1c). Au moins une section (4a) de la première portion (1c) présente un centre de masse (ma) situé sur l'axe de rotation. Toute section (4b) de la seconde portion (1d) présente un centre de masse (mb) décalé par rapport à l'axe de rotation et au moins une arête de coupe (5a) définie par ladite section (4b) est située en retrait.

WO 2014/118591 A8

Expéditeur : le BUREAU INTERNATIONAL

PCT

DEUXIÈME AVIS SUPPLÉMENTAIRE INFORMANT LE DÉPOSANT DE LA COMMUNICATION DE LA DEMANDE INTERNATIONALE (AUX OFFICES DÉSIGNÉS QUI APPLIQUENT LE DÉLAI DE 30 MOIS SELON L'ARTICLE 22.1))

(règle 47.1.c) du PCT)

Destinataire :

MICHELI & CIE SA
122, rue de Genève
C.P. 61
CH-1226 Thônex
SUISSE

Date d'expédition *(jour/mois/année)*
04 juin 2015 (04.06.2015)

Référence du dossier du déposant ou du mandataire
BM/CCM/ld/16350-PCT

AVIS IMPORTANT

Demande internationale nº	Date du dépôt international *(jour/mois/année)*	Date de priorité *(jour/mois/année)*
PCT/IB2013/001191	07 juin 2013 (07.06.2013)	30 janvier 2013 (30.01.2013)

Déposant
MAILLEFER INSTRUMENTS HOLDING SARL

1. **ATTENTION** : Pour tout office désigné auquel le délai selon l'article 22.1) tel qu'il est en vigueur depuis le 1er avril 2002 (30 mois à compter de la date de priorité) **ne s'applique pas**, se reporter au formulaire PCT/IB/308(Premier avis) émis antérieurement.

2. Il est notifié par la présente que l'office ou les offices désignés suivants – auxquels le délai selon l'article 22.1) tel qu'il est en vigueur depuis le 1er avril 2002 **s'applique** – ont demandé que la communication de la demande internationale, prévue à l'article 20, soit effectuée conformément à la règle 93*bis*.1. Le Bureau international a adressé cette communication à la date indiquée ci-dessous : 07 août 2014 (07.08.2014)

   AZ, BY, CN, EP, HU, KG, KP, KR, MD, MK, MZ, NA, NG, PG, RU, SY, TM

   Conformément à la règle 47.1.c-*bis*)i), ces offices accepteront le présent avis comme preuve déterminante du fait que la communication de la demande internationale a bien été effectuée à la date d'expédition indiquée ci-dessus et il ne sera pas exigé du déposant qu'il fournisse une copie de la demande internationale à l'office ou aux offices désignés.

3. Les offices désignés suivants, auxquels le délai selon l'article 22.1) tel qu'il est en vigueur depuis le 1er avril 2002 **s'applique**, n'ont pas demandé, à la date d'expédition du présent avis, que la communication de la demande internationale soit effectuée conformément à la règle 93*bis*.1 :

   AE, AG, AL, AM, AO, AP, AT, AU, BA, BB, BG, BH, BN, BR, BW, BZ, CA, CH, CL, CO, CR, CU, CZ, DE, DK, DM, DO, DZ, EA, EC, EE, EG, ES, FI, GB, GD, GE, GH, GM, GT, HN, HR, ID, IL, IN, IS, JP, KE, KN, KZ, LA, LC, LK, LR, LS, LT, LY, MA, ME, MG, MN, MW, MX, MY, NI, NO, NZ, OA, OM, PA, PE, PH, PL, PT, QA, RO, RS, RW, SC, SD, SE, SG, SK, SL, SM, ST, SV, TH, TJ, TN, TR, TT, UA, US, UZ, VC, VN, ZA, ZM, ZW

   Conformément à la règle 47.1.c-*bis*)ii), ces offices accepteront le présent avis comme preuve déterminante du fait que l'État contractant pour lequel cet office agit en tant qu'office désigné n'exige pas du déposant qu'il fournisse en vertu de l'article 22 une copie de la demande internationale.

4. **DÉLAIS pour l'ouverture de la phase nationale**

   Pour le ou les offices désignés ou élus mentionnés ci-dessus, le délai applicable pour l'ouverture de la phase nationale sera, **sous réserve de ce qui est dit au paragraphe suivant,** de **30 MOIS** à compter de la date de priorité.

   En pratique, **des délais autres que celui de 30 mois** continueront de s'appliquer, pour des durées diverses, en ce qui concerne certains offices désignés ou élus mentionnés ci-dessus. Pour obtenir **les mises à jour régulières relatives aux délais applicables** (30 ou 31 mois, ou autre délai), office par office, on se reportera à la *Gazette du PCT*, au bulletin *PCT Newsletter* ainsi qu'aux chapitres nationaux pertinents dans le volume II du *Guide du déposant du PCT*, accessibles sur le site Internet de l'OMPI à l'adresse suivante : http://www.wipo.int/pct/fr/index.html.

   Le déposant est **seul responsable** du respect de tous les délais visés ci-dessus.

Bureau international de l'OMPI
34, chemin des Colombettes
1211 Genève 20, Suisse

nº de télécopieur +41 22 338 82 70

Fonctionnaire autorisé
Cécile Chatel

courriel : ro.ib@wipo.int

Electronic Patent Application Fee Transmittal

Application Number:	
Filing Date:	
Title of Invention:	INSTRUMENT FOR DRILLING DENTAL ROOT CANALS
First Named Inventor/Applicant Name:	Gilbert ROTA
Filer:	Benoit Castel/Nadine Beasley
Attorney Docket Number:	5001-1489

Filed as Large Entity

Filing Fees for U.S. National Stage under 35 USC 371

Description	Fee Code	Quantity	Amount	Sub-Total in USD($)
Basic Filing:				
National Stage Fee	1631	1	280	280
Natl Stage Search Fee - Report provided	1642	1	480	480
National Stage Exam - all other cases	1633	1	720	720
Pages:				
Claims:				
Miscellaneous-Filing:				
Oath/Decl > 30 Mos From 371 commencement	1617	1	140	140
Petition:				

Description	Fee Code	Quantity	Amount	Sub-Total in USD($)
Patent-Appeals-and-Interference:				
Post-Allowance-and-Post-Issuance:				
Extension-of-Time:				
Miscellaneous:				
			Total in USD ($)	**1620**

Electronic Acknowledgement Receipt

EFS ID:	22611044
Application Number:	14651677
International Application Number:	PCT/IB2013/001191
Confirmation Number:	4162
Title of Invention:	INSTRUMENT FOR DRILLING DENTAL ROOT CANALS
First Named Inventor/Applicant Name:	Gilbert ROTA
Customer Number:	466
Filer:	Benoit Castel/Nadine Beasley
Filer Authorized By:	Benoit Castel
Attorney Docket Number:	5001-1489
Receipt Date:	12-JUN-2015
Filing Date:	
Time Stamp:	08:16:58
Application Type:	U.S. National Stage under 35 USC 371

Payment information:

Submitted with Payment	yes
Payment Type	Credit Card
Payment was successfully received in RAM	$1620
RAM confirmation Number	20738
Deposit Account	250120
Authorized User	CASTEL, BENOIT

The Director of the USPTO is hereby authorized to charge indicated fees and credit any overpayment as follows:

Charge any Additional Fees required under 37 C.F.R. 1.492 (National application filing, search, and examination fees)

Charge any Additional Fees required under 37 C.F.R. Section 1.17 (Patent application and reexamination processing fees)

Charge any Additional Fees required under 37 C.F.R. Section 1.19 (Document supply fees)

File Listing:

Document Number	Document Description	File Name	File Size(Bytes)/ Message Digest	Multi Part /.zip	Pages (if appl.)
1	Transmittal of New Application	1390.pdf	34441 119234c6d6929c6b3720841a7747e54de0b1e610	no	1
Warnings:					
Information:					
2		SPEC.pdf	73693 7223167b6d5c9422ff786e2c17d96cc939da46d6	yes	16
	Multipart Description/PDF files in .zip description				
	Document Description		**Start**	**End**	
	Specification		1	13	
	Claims		14	15	
	Abstract		16	16	
Warnings:					
Information:					
3	Drawings-other than black and white line drawings	DWGS.pdf	44619 fbdc1bdd934ce2e444e1100ce29f6482adc787f6	no	4
Warnings:					
Information:					
4	Application Data Sheet	ADS.pdf	1561480 51f0718d98ae932fb801415f2d26d714cc723a7d	no	7
Warnings:					
Information:					
5	Information Disclosure Statement (IDS) Form (SB08)	IDS.pdf	612577 b4edf339b695f8246c821d4f80823296a70beb7a	no	4
Warnings:					
Information:					
6	Other Reference-Patent/App/Search documents	ISR.pdf	73749 4cd8fa141f1bf990a7da729db0a220b3c3c265fe	no	3

Warnings:					
Information:					
7	Foreign Reference	REF_DE102006007316A1.pdf	401670 6ad5f1166853c3097daf93e11cf7425d37da91bb	no	13
Warnings:					
Information:					
8	Foreign Reference	REF_EP1361831A1.pdf	76151 ac237fd81b8f63fcc71d86877acb42991fd8f90a	no	3
Warnings:					
Information:					
9		PRELIM.pdf	37093 a4f34acd82d6c072cbc478076a104588a6a657f6	yes	10

Multipart Description/PDF files in .zip description

Document Description	Start	End
Preliminary Amendment	1	1
Specification	2	2
Claims	3	7
Applicant Arguments/Remarks Made in an Amendment	8	9
Abstract	10	10

Warnings:					
Information:					
10	Documents submitted with 371 Applications	WIPO_Cover_Page_Only.pdf	75767 a157e84b644dbba32e6e890f8354d94b368721fa	no	1
Warnings:					
Information:					
11	Documents submitted with 371 Applications	PCT_IB-308.pdf	69323 2c4dd726ffbc9ae022d7070d15b0c6acd477b342	no	1
Warnings:					
Information:					
12	Fee Worksheet (SB06)	fee-info.pdf	36983 a840a1deac67da371598328a8b09faa8437f902d	no	2
Warnings:					
Information:					

Total Files Size (in bytes):	3097546

This Acknowledgement Receipt evidences receipt on the noted date by the USPTO of the indicated documents, characterized by the applicant, and including page counts, where applicable. It serves as evidence of receipt similar to a Post Card, as described in MPEP 503.

New Applications Under 35 U.S.C. 111
If a new application is being filed and the application includes the necessary components for a filing date (see 37 CFR 1.53(b)-(d) and MPEP 506), a Filing Receipt (37 CFR 1.54) will be issued in due course and the date shown on this Acknowledgement Receipt will establish the filing date of the application.

National Stage of an International Application under 35 U.S.C. 371
If a timely submission to enter the national stage of an international application is compliant with the conditions of 35 U.S.C. 371 and other applicable requirements a Form PCT/DO/EO/903 indicating acceptance of the application as a national stage submission under 35 U.S.C. 371 will be issued in addition to the Filing Receipt, in due course.

New International Application Filed with the USPTO as a Receiving Office
If a new international application is being filed and the international application includes the necessary components for an international filing date (see PCT Article 11 and MPEP 1810), a Notification of the International Application Number and of the International Filing Date (Form PCT/RO/105) will be issued in due course, subject to prescriptions concerning national security, and the date shown on this Acknowledgement Receipt will establish the international filing date of the application.

SCORE Placeholder Sheet for IFW Content

Application Number: 14651677 Document Date: 06/12/2015

The presence of this form in the IFW record indicates that the following document type was received in electronic format on the date identified above. This content is stored in the SCORE database.

Since this was an electronic submission, there is no physical artifact folder, no artifact folder is recorded in PALM, and no paper documents or physical media exist. The TIFF images in the IFW record were created from the original documents that are stored in SCORE.

- Drawing

At the time of document entry (noted above):

- USPTO employees may access SCORE content via eDAN using the Supplemental Content tab, or via the SCORE web page.
- External customers may access SCORE content via PAIR using the Supplemental Content tab.

Form Revision Date: August 26, 2013

VIA FAX

CONFIRMATION

PCT

REQUÊTE

Le soussigné requiert que la présente demande internationale soit traitée conformément au Traité de coopération en matière de brevets.

Réservé à l'office récepteur

PCT/IB20 13 / 001191
Demande internationale n°

07 JUNE 2013 (07. 06. 2013)
Date du dépôt international

INTERNATIONAL BUREAU OF WIPO
PCT International Application
Nom de l'office récepteur et "Demande internationale PCT"

Référence du dossier du déposant ou du mandataire *(facultatif) (12 caractères au maximum)* BM/CCM/Id/16350-PCT

Cadre n° I TITRE DE L'INVENTION

Instrument pour l'alésage des canaux radiculaires dentaires

Cadre n° II DÉPOSANT ☐ Cette personne est aussi inventeur

Nom et adresse : *(Nom de famille suivi du prénom; pour une personne morale, désignation officielle complète. L'adresse doit comprendre le code postal et le nom du pays. Le pays de l'adresse indiquée dans ce cadre est l'État où le déposant a son domicile si aucun domicile n'est indiqué ci-dessous.)*

MAILLEFER INSTRUMENTS HOLDING Sàrl
Chemin du Verger 3
1338 Ballaigues
Suisse

n° de téléphone

n° de télécopieur

n° sous lequel le déposant est inscrit auprès de l'office

Autorisation de recourir au courrier électronique : En cochant l'une des cases ci-dessous, le déposant autorise l'office récepteur, l'administration chargée de la recherche internationale, le Bureau international et l'administration chargée de l'examen préliminaire international à utiliser l'adresse électronique mentionnée dans le présent cadre pour envoyer, si cet office le souhaite, les notifications établies en relation avec la présente demande internationale,

☐ en tant que notifications préliminaires suivies de notifications sur papier; ou ☐ exclusivement sous forme électronique (aucune notification sur papier ne sera envoyée)

Adresse électronique :

Nationalité *(nom de l'État)* : Suisse

Domicile *(nom de l'État)* : Suisse

Cette personne est déposant pour : ☒ tous les États désignés ☐ les États indiqués dans le cadre supplémentaire

Cadre n° III AUTRE(S) DÉPOSANT(S) OU (AUTRE(S)) INVENTEUR(S)

☒ D'autres déposants ou inventeurs sont indiqués sur une feuille annexe.

Cadre n° IV MANDATAIRE OU REPRÉSENTANT COMMUN; OU ADRESSE POUR LA CORRESPONDANCE

La personne dont l'identité est donnée ci-dessous est/a été désignée pour agir au nom du ou des déposants auprès des autorités internationales compétentes, comme: ☒ mandataire ☐ représentant commun

Nom et adresse : *(Nom de famille suivi du prénom; pour une personne morale, désignation officielle complète. L'adresse doit comprendre le code postal et le nom du pays.)*

MICHELI & CIE SA
122, rue de Genève
C.P. 61
1226 Thônex
Suisse

n° de téléphone
+41 22 348 49 89

n° de télécopieur
+41 22 348 49 38

n° sous lequel le mandataire est inscrit auprès de l'office

Autorisation de recourir au courrier électronique : En cochant l'une des cases ci-dessous, le déposant autorise l'office récepteur, l'administration chargée de la recherche internationale, le Bureau international et l'administration chargée de l'examen préliminaire international à utiliser l'adresse électronique mentionnée dans le présent cadre pour envoyer, si cet office le souhaite, les notifications établies en relation avec la présente demande internationale,

☐ en tant que notifications préliminaires suivies de notifications sur papier; ou ☐ exclusivement sous forme électronique (aucune notification sur papier ne sera envoyée)

Adresse électronique :

☐ **Adresse pour la correspondance :** cocher cette case lorsque aucun mandataire ni représentant commun n'est/n'a été désigné et que l'espace ci-dessus est utilisé pour indiquer une adresse spéciale à laquelle la correspondance doit être envoyée.

Feuille n° ...2...

Cadre n° III AUTRE(S) DÉPOSANT(S) OU (AUTRE(S)) INVENTEUR(S)

Si aucun des sous-cadres suivants n'est utilisé, cette feuille ne doit pas être incluse dans la requête.

Nom et adresse : *(Nom de famille suivi du prénom; pour une personne morale, désignation officielle complète. L'adresse doit comprendre le code postal et le nom du pays. Le pays de l'adresse indiquée dans ce cadre est l'État où le déposant a son domicile si aucun domicile n'est indiqué ci-dessous.)*

ROTA Gilbert
8 rue Pré Jean
25160 Vaux et Chantegrue
France

Cette personne est :
- [ ] déposant seulement
- [ ] déposant et inventeur
- [x] inventeur seulement *(Si cette case est cochée, ne pas remplir la suite.)*

n° sous lequel le déposant est inscrit auprès de l'office

Nationalité *(nom de l'État)* : FRANCE

Domicile *(nom de l'État)* : FRANCE

Cette personne est déposant pour : [ ] tous les États désignés [ ] les États indiqués dans le cadre supplémentaire

Nom et adresse : *(Nom de famille suivi du prénom; pour une personne morale, désignation officielle complète. L'adresse doit comprendre le code postal et le nom du pays. Le pays de l'adresse indiquée dans ce cadre est l'État où le déposant a son domicile si aucun domicile n'est indiqué ci-dessous.)*

VALLOTTON Paul-Henri
Rue du Melley 22 C
1142 Pampigny
Suisse

Cette personne est :
- [ ] déposant seulement
- [ ] déposant et inventeur
- [x] inventeur seulement *(Si cette case est cochée, ne pas remplir la suite.)*

n° sous lequel le déposant est inscrit auprès de l'office

Nationalité *(nom de l'État)* : SUISSE

Domicile *(nom de l'État)* : SUISSE

Cette personne est déposant pour : [ ] tous les États désignés [ ] les États indiqués dans le cadre supplémentaire

Nom et adresse : *(Nom de famille suivi du prénom; pour une personne morale, désignation officielle complète. L'adresse doit comprendre le code postal et le nom du pays. Le pays de l'adresse indiquée dans ce cadre est l'État où le déposant a son domicile si aucun domicile n'est indiqué ci-dessous.)*

Cette personne est :
- [ ] déposant seulement
- [ ] déposant et inventeur
- [ ] inventeur seulement *(Si cette case est cochée, ne pas remplir la suite.)*

n° sous lequel le déposant est inscrit auprès de l'office

Nationalité *(nom de l'État)* :

Domicile *(nom de l'État)* :

Cette personne est déposant pour : [ ] tous les États désignés [ ] les États indiqués dans le cadre supplémentaire

Nom et adresse : *(Nom de famille suivi du prénom; pour une personne morale, désignation officielle complète. L'adresse doit comprendre le code postal et le nom du pays. Le pays de l'adresse indiquée dans ce cadre est l'État où le déposant a son domicile si aucun domicile n'est indiqué ci-dessous.)*

Cette personne est :
- [ ] déposant seulement
- [ ] déposant et inventeur
- [ ] inventeur seulement *(Si cette case est cochée, ne pas remplir la suite.)*

n° sous lequel le déposant est inscrit auprès de l'office

Nationalité *(nom de l'État)* :

Domicile *(nom de l'État)* :

Cette personne est déposant pour : [ ] tous les États désignés [ ] les États indiqués dans le cadre supplémentaire

[ ] D'autres déposants ou inventeurs sont indiqués sur une feuille annexe.

Cadre n° V DÉSIGNATIONS

Le dépôt de la présente requête **vaut, selon la règle 4.9.a), désignation** de tous les États contractants liés par le PCT à la date du dépôt international, aux fins de la délivrance de tout titre de protection disponible et, le cas échéant, aux fins de la délivrance à la fois de brevets régionaux et nationaux.

Cependant,

☐ DE Allemagne **n'est désignée** pour aucun titre de protection nationale

☐ JP Japon **n'est désigné** pour aucun titre de protection nationale

☐ KR République de Corée **n'est désignée** pour aucun titre de protection nationale

(Les cases mentionnées ci-dessus peuvent seulement être utilisées pour exclure (irrévocablement) les désignations concernées si, au moment du dépôt ou ultérieurement en vertu de la règle 26bis.1, la demande internationale revendique dans le cadre n° VI la priorité d'une demande nationale antérieure déposée dans l'État considéré, afin d'éviter que cette demande nationale antérieure ne cesse de produire ses effets en vertu de la législation nationale.)

Cadre n° VI REVENDICATION DE PRIORITÉ ET DOCUMENT DE PRIORITÉ

La priorité de la ou des demandes antérieures suivantes est revendiquée :

Date de dépôt de la demande antérieure *(jour/mois/année)*	Numéro de la demande antérieure	Lorsque la demande antérieure est une :		
		demande nationale : pays ou membre de l'OMC	demande régionale : office régional	demande internationale : office récepteur
point 1) 30/01/2013 (30 janvier 2013)	PCT/IB2013/ 000108			IB
point 2)				
point 3)				

☐ D'autres revendications de priorité sont indiquées dans le cadre supplémentaire.

Remise du(des) document(s) de priorité :

☒ L'**office récepteur** est prié d'établir et de transmettre au Bureau international une copie certifiée conforme de la ou des demandes antérieures *(uniquement si la ou les demandes antérieures ont été déposées auprès de l'office récepteur qui, aux fins de la présente demande internationale, est l'office récepteur)* indiquées ci-dessus sous :

☒ tous les points ☐ le point 1) ☐ le point 2) ☐ le point 3) ☐ autre, voir le cadre supplémentaire

☐ Le **Bureau international** est prié de se procurer auprès d'une bibliothèque numérique, le cas échéant, au moyen du (des) code(s) d'accès mentionné(s) ci-dessous, une copie certifiée conforme de la ou des demandes antérieures *(si la ou les demandes antérieures sont accessibles au Bureau international auprès d'une bibliothèque numérique)* indiquées ci-dessus sous :

☐ le point 1) code d'accès _____ ☐ le point 2) code d'accès _____ ☐ le point 3) code d'accès _____ ☐ autre, voir le cadre supplémentaire

Restaurer le droit de priorité : il est demandé à l'office récepteur de restaurer le droit de priorité concernant la ou les demandes antérieures indiquées plus haut ou dans le cadre supplémentaire sous les points _____. *(Voir également les notes relatives au cadre n° VI; des renseignements complémentaires **doivent** être communiqués à l'appui de la requête en restauration du droit de priorité).*

Incorporation par renvoi : lorsqu'un élément de la demande internationale visé à l'article 11.1)iii) d) ou e) ou une partie de la description, des revendications ou des dessins visée à la règle 20.5.a) n'est pas contenu ailleurs dans cette demande internationale mais est intégralement contenu dans une demande antérieure dont la priorité est revendiquée à la date à laquelle un ou plusieurs des éléments visés à l'article 11.1)iii) ont été initialement reçus par l'office récepteur, cet élément ou cette partie est, sous réserve de la confirmation selon la règle 20.6, incorporé par renvoi dans cette demande internationale aux fins de la règle 20.6.

Cadre n° VII ADMINISTRATION CHARGÉE DE LA RECHERCHE INTERNATIONALE

Choix de l'administration chargée de la recherche internationale (ISA) *(si plus d'une administration chargée de la recherche internationale est compétente pour procéder à la recherche internationale, indiquer l'administration choisie; le code à deux lettres peut être utilisé) :*

ISA / EP

Feuille n° ...4...

Suite du Cadre n° VII **UTILISATION DES RÉSULTATS D'UNE RECHERCHE ANTÉRIEURE; MENTION DE CETTE RECHERCHE**

☐ L'administration chargée de la recherche internationale indiquée dans le cadre n° VII est priée de prendre en considération les résultats de la ou des recherches antérieures mentionnées ci-dessous *(voir également les notes relatives au cadre n° VII; utilisation des résultats de plus d'une recherche antérieure)*

Date de dépôt *(jour/mois/année)* Numéro de dépôt Pays *(ou office régional)*

☐ **Déclaration (règle 4.12.ii))** : la présente demande internationale est identique, ou pratiquement identique à la demande pour laquelle la recherche antérieure a été effectuée, mais, le cas échéant, elle a été déposée dans une langue différente.

☐ **Disponibilité des documents** : les documents suivants sont à la disposition de l'administration chargée de la recherche internationale sous une forme et d'une manière qu'elle accepte et, en conséquence, le déposant n'a pas à les fournir (règle 12*bis*.1.f))

- ☐ une copie des résultats de la recherche antérieure,*
- ☐ une copie de la demande antérieure,
- ☐ une traduction de la demande antérieure dans une langue acceptée par l'administration chargée de la recherche internationale,
- ☐ une traduction des résultats de la recherche antérieure dans une langue acceptée par l'administration chargée de la recherche internationale,
- ☐ une copie de tout document cité dans les résultats de la recherche antérieure. *(Si possible, indiquer ci-après le(s) document(s) disponible(s) pour l'administration chargée de la recherche internationale):*

☐ **Transmettre une copie des résultats de la recherche antérieure et d'autres documents** *(si la recherche antérieure **n'a pas** été effectuée par l'administration chargée de la recherche internationale mentionnée ci-dessus mais par l'office qui agit en tant qu'office récepteur)* : l'**office récepteur** est prié de préparer et de transmettre à l'administration chargée de la recherche internationale (règle 12*bis*.1.c)) :

- ☐ une copie des résultats de la recherche antérieure,*
- ☐ une copie de la demande antérieure,
- ☐ une copie de tout document cité dans les résultats de la recherche antérieure.

* Lorsque les résultats de la recherche antérieure ne sont ni disponibles auprès d'une bibliothèque numérique ni transmis par l'office récepteur, il appartient au déposant de les lui remettre (règle 12*bis*.1.a)). (voir également le point 11 du bordereau et les notes relatives au cadre n° VII)

Date de dépôt *(jour/mois/année)* Numéro de dépôt Pays *(ou office régional)*

☐ **Déclaration (règle 4.12.ii))** : la présente demande internationale est identique, ou pratiquement identique à la demande pour laquelle la recherche antérieure a été effectuée, mais, le cas échéant, elle a été déposée dans une langue différente.

☐ **Disponibilité des documents** : les documents suivants sont à la disposition de l'administration chargée de la recherche internationale sous une forme et d'une manière qu'elle accepte et, en conséquence, le déposant n'a pas à les fournir (règle 12*bis*.1.f)):

- ☐ une copie des résultats de la recherche antérieure,*
- ☐ une copie de la demande antérieure,
- ☐ une traduction de la demande antérieure dans une langue acceptée par l'administration chargée de la recherche internationale,
- ☐ une traduction des résultats de la recherche antérieure dans une langue acceptée par l'administration chargée de la recherche internationale,
- ☐ une copie de tout document cité dans les résultats de la recherche antérieure. *(Si possible, indiquer ci-après le(s) document(s) disponible(s) pour l'administration chargée de la recherche internationale):*

☐ **Transmettre une copie des résultats de la recherche antérieure et d'autres documents** *(si la recherche antérieure **n'a pas** été effectuée par l'administration chargée de la recherche internationale mentionnée ci-dessus mais par l'office qui agit en tant qu'office récepteur)* : l'**office récepteur** est prié de préparer et de transmettre à l'administration chargée de la recherche internationale (règle 12*bis*.1.c)) :

- ☐ une copie des résultats de la recherche antérieure,*
- ☐ une copie de la demande antérieure,
- ☐ une copie de tout document cité dans les résultats de la recherche antérieure.

* Lorsque les résultats de la recherche antérieure ne sont ni disponibles auprès d'une bibliothèque numérique ni transmis par l'office récepteur, il appartient au déposant de les lui remettre (règle 12*bis*.1.a)). (voir également le point 11 du bordereau et les notes relatives au cadre n° VII)

☐ D'autres recherches antérieures sont indiquées sur une feuille annexe.

Cadre n° VIII DÉCLARATIONS

Les **déclarations** suivantes figurent dans les cadres n° VIII.i) à v) *(cocher ci-dessous la ou les cases appropriées et indiquer dans la colonne de droite le nombre de chaque type de déclaration)* :		Nombre de déclarations
☐ cadre n° VIII.i)	déclaration relative à l'identité de l'inventeur :	
☐ cadre n° VIII.ii)	déclaration relative au droit du déposant, à la date du dépôt international, de demander et d'obtenir un brevet :	
☐ cadre n° VIII.iii)	déclaration relative au droit du déposant, à la date du dépôt international, de revendiquer la priorité d'une demande antérieure :	
☐ cadre n° VIII.iv)	déclaration relative à la qualité d'inventeur (seulement aux fins de la désignation des États-Unis d'Amérique) :	
☐ cadre n° VIII.v)	déclaration relative à des divulgations non opposables ou à des exceptions au défaut de nouveauté :	

Feuille n° ...5...

Cadre n° IX **BORDEREAU relatif aux dépôts sur PAPIER** – cette feuille doit être utilisée exclusivement en cas de dépôt d'une demande internationale sur **PAPIER**

La présente demande internationale **contient les éléments suivants**:	Nombre de feuilles
a) formulaire de requête (PCT/RO/101) (y compris la ou les déclarations et les feuilles supplémentaires)	5
b) description (à l'exception de la partie de la description réservée au listage des séquences, (voir le point f), ci-dessous)	13
c) revendications	3
d) abrégé	1
e) dessins (le cas échéant)	4
f) partie de la description réservée au listage des séquences (le cas échéant)	
Nombre total de feuilles	26

Le ou les éléments suivants sont **joints à** la présente demande internationale *(cocher la ou les cases appropriées et indiquer dans la colonne de droite le nombre de chaque élément)* :	Nombre d'éléments
1. ☒ feuille de calcul des taxes	1
2. ☐ original du pouvoir distinct	
3. ☐ original du pouvoir général	
4. ☐ copie du pouvoir général; le cas échéant, numéro de référence :	
5. ☐ document(s) de priorité indiqué(s) dans le cadre n° VI au(x) point(s)	
6. ☐ traduction de la demande internationale en *(langue)* :	
7. ☐ indications séparées concernant des micro-organismes ou autre matériel biologique déposés	
8. ☐ copie sous forme électronique du listage des séquences ne faisant pas partie de la demande internationale (en format texte selon la norme de l'annexe C/ST.25), sur support(s) matériel(s), qui est **remise exclusivement aux fins de la recherche internationale** en vertu de la règle 13*ter* *(indiquer type et nombre de supports)*	
9. ☐ avec la déclaration quant à "l'identité entre le contenu de la copie remise sous forme électronique, selon la règle 13*ter*, et celui du listage des séquences contenu dans la demande internationale" telle que déposée sur papier	
10. ☐ copie des résultats de la recherche antérieure (règle 12*bis*.1.a))	
11. ☐ autres éléments *(préciser)* :	

Figure des dessins qui doit accompagner l'abrégé : 1

Langue de dépôt de la demande internationale : FRANCAIS

Cadre n° X **SIGNATURE DU DÉPOSANT, DU MANDATAIRE OU DU REPRÉSENTANT COMMUN**

À côté de chaque signature, indiquer le nom du signataire et à quel titre l'intéressé signe (si cela n'apparaît pas clairement à la lecture de la requête).

Thônex, le 7 juin 2013

MICHELI & CIE SA

Christelle COLLOT-MOULIN Bernard MAYJONADE

Réservé à l'office récepteur

1. Date effective de réception des pièces supposées constituer la demande internationale : 07 JUNE 2013 (07.06.2013)
2. Dessins : ☐ reçus : ☐ non reçus :
3. Date effective de réception, rectifiée en raison de la réception ultérieure, mais dans les délais, de documents ou de dessins complétant ce qui est supposé constituer la demande internationale :
4. Date de réception, dans les délais, des corrections demandées selon l'article 11.2) du PCT :
5. Administration chargée de la recherche internationale (si plusieurs sont compétentes) : ISA /
6. ☐ Transmission de la copie de recherche différée jusqu'au paiement de la taxe de recherche

Réservé au Bureau international

Date de réception de l'exemplaire original par le Bureau international :

WIPO | OMPI
WORLD
INTELLECTUAL PROPERTY
ORGANIZATION
ORGANISATION MONDIALE
DE LA PROPRIÉTÉ
INTELLECTUELLE

PATENT COOPERATION TREATY (PCT)

Certified Copy of the International Application as Filed and of Any Corrections thereto

TRAITÉ DE COOPERATION EN MATIÈRE DE BREVETS (PCT)

Copie certifiée conforme de la demande internationale, telle qu' elle a été déposée, ainsi que toutes corrections y relatives

International Application number	PCT/IB2013/000108	Numéro de la demande internationale
International Filing Date	30 January 2013 (30.01.2013)	Date de dépôt international

Geneva, 10 June 2013 (10.06.2013)

International Bureau of the World Intellectual Property Organization

Genève, le 10 juin 2013 (10.06.2013)

Bureau International de l' Organisation Mondiale de la Propriété Intellectuelle

/ Cécile Chatel /
Coordinator, Receiving and Processing Team
Coordonnatrice, Equipe de Réception et de Traitement

T +4122 338 83 16
F +4122 910 06 10

34, chemin des Colombettes
1211 Geneva 20, Switzerland
www.wipo.int

International Application number	PCT/IB2013/000108	Numéro de la demande internationale
International Filing Date	30 January 2013 (30.01.2013)	Date de dépôt international

Contents:

P A R T E L E F A X

CCN

PCT

REQUÊTE

Le soussigné requiert que la présente demande internationale soit traitée conformément au Traité de coopération en matière de brevets.

Réservé à l'office récepteur

Demande internationale n° PCT/IB2013/000108

Date du dépôt international 30 JANUARY 2013 (30.01.2013)

Nom de l'office récepteur et "Demande internationale PCT" INTERNATIONAL BUREAU OF WIPO PCT International Application

Référence du dossier du déposant ou du mandataire *(facultatif) (12 caractères au maximum)* BM/CM/Id/16270-PCT

Cadre n° I TITRE DE L'INVENTION

Instrument pour l'alésage des canaux radiculaires dentaires

Cadre n° II DÉPOSANT ☐ Cette personne est aussi inventeur

Nom et adresse : *(Nom de famille suivi du prénom; pour une personne morale, désignation officielle complète. L'adresse doit comprendre le code postal et le nom du pays. Le pays de l'adresse indiquée dans ce cadre est l'État où le déposant a son domicile si aucun domicile n'est indiqué ci-dessous.)*

MAILLEFER INSTRUMENTS HOLDING Sàrl
Chemin du Verger 3
1338 Ballaigues
SUISSE

n° de téléphone

n° de télécopieur

n° sous lequel le déposant est inscrit auprès de l'office

Autorisation de recourir au courrier électronique : En cochant l'une des cases ci-dessous, le déposant autorise l'office récepteur, l'administration chargée de la recherche internationale, le Bureau international et l'administration chargée de l'examen préliminaire international à utiliser l'adresse électronique mentionnée dans le présent cadre pour envoyer, si cet office le souhaite, les notifications établies en relation avec la présente demande internationale,

☐ en tant que notifications préliminaires suivies de notifications sur papier; ou ☐ exclusivement sous forme électronique (aucune notification sur papier ne sera envoyée)

Adresse électronique :

Nationalité *(nom de l'État)* : Suisse

Domicile *(nom de l'État)* : Suisse

Cette personne est déposant pour : ☒ tous les États désignés ☐ les États indiqués dans le cadre supplémentaire

Cadre n° III AUTRE(S) DÉPOSANT(S) OU (AUTRE(S)) INVENTEUR(S)

☒ D'autres déposants ou inventeurs sont indiqués sur une feuille annexe.

Cadre n° IV MANDATAIRE OU REPRÉSENTANT COMMUN; OU ADRESSE POUR LA CORRESPONDANCE

La personne dont l'identité est donnée ci-dessous est/a été désignée pour agir au nom du ou des déposants auprès des autorités internationales compétentes, comme: ☒ mandataire ☐ représentant commun

Nom et adresse : *(Nom de famille suivi du prénom; pour une personne morale, désignation officielle complète. L'adresse doit comprendre le code postal et le nom du pays.)*

MICHELI & CIE SA
122, rue de Genève
CP 61
1226 Thônex
SUISSE

n° de téléphone +41 22 348 49 89

n° de télécopieur +41 22 348 49 38

n° sous lequel le mandataire est inscrit auprès de l'office

Autorisation de recourir au courrier électronique : En cochant l'une des cases ci-dessous, le déposant autorise l'office récepteur, l'administration chargée de la recherche internationale, le Bureau international et l'administration chargée de l'examen préliminaire international à utiliser l'adresse électronique mentionnée dans le présent cadre pour envoyer, si cet office le souhaite, les notifications établies en relation avec la présente demande internationale,

☐ en tant que notifications préliminaires suivies de notifications sur papier; ou ☐ exclusivement sous forme électronique (aucune notification sur papier ne sera envoyée)

Adresse électronique :

☐ **Adresse pour la correspondance** : cocher cette case lorsque aucun mandataire ni représentant commun n'est/n'a été désigné et que l'espace ci-dessus est utilisé pour indiquer une adresse spéciale à laquelle la correspondance doit être envoyée.

PCT/IB20 13 / 00 3 108

Feuille n° 2

Cadre n° III AUTRE(S) DÉPOSANT(S) OU (AUTRE(S)) INVENTEUR(S)

Si aucun des sous-cadres suivants n'est utilisé, cette feuille ne doit pas être incluse dans la requête.

Nom et adresse : *(Nom de famille suivi du prénom; pour une personne morale, désignation officielle complète. L'adresse doit comprendre le code postal et le nom du pays. Le pays de l'adresse indiquée dans ce cadre est l'État où le déposant a son domicile si aucun domicile n'est indiqué ci-dessous.)*

ROTA Gilbert
8, rue Pré-Jean
25160 Vaux-et-Chantegrue
FRANCE

Cette personne est :
- [ ] déposant seulement
- [ ] déposant et inventeur
- [x] inventeur seulement *(Si cette case est cochée, ne pas remplir la suite.)*

n° sous lequel le déposant est inscrit auprès de l'office

Nationalité *(nom de l'État)* : FRANCE

Domicile *(nom de l'État)* : FRANCE

Cette personne est déposant pour : [ ] tous les États désignés [ ] les États indiqués dans le cadre supplémentaire

Nom et adresse : *(Nom de famille suivi du prénom; pour une personne morale, désignation officielle complète. L'adresse doit comprendre le code postal et le nom du pays. Le pays de l'adresse indiquée dans ce cadre est l'État où le déposant a son domicile si aucun domicile n'est indiqué ci-dessous.)*

VALLOTTON Paul-Henri
Rue du Melley 22 C
1142 Pampigny
SUISSE

Cette personne est :
- [ ] déposant seulement
- [ ] déposant et inventeur
- [x] inventeur seulement *(Si cette case est cochée, ne pas remplir la suite.)*

n° sous lequel le déposant est inscrit auprès de l'office

Nationalité *(nom de l'État)* : SUISSE

Domicile *(nom de l'État)* : SUISSE

Cette personne est déposant pour : [ ] tous les États désignés [ ] les États indiqués dans le cadre supplémentaire

Nom et adresse : *(Nom de famille suivi du prénom; pour une personne morale, désignation officielle complète. L'adresse doit comprendre le code postal et le nom du pays. Le pays de l'adresse indiquée dans ce cadre est l'État où le déposant a son domicile si aucun domicile n'est indiqué ci-dessous.)*

Cette personne est :
- [ ] déposant seulement
- [ ] déposant et inventeur
- [ ] inventeur seulement *(Si cette case est cochée, ne pas remplir la suite.)*

n° sous lequel le déposant est inscrit auprès de l'office

Nationalité *(nom de l'État)* :

Domicile *(nom de l'État)* :

Cette personne est déposant pour : [ ] tous les États désignés [ ] les États indiqués dans le cadre supplémentaire

Nom et adresse : *(Nom de famille suivi du prénom; pour une personne morale, désignation officielle complète. L'adresse doit comprendre le code postal et le nom du pays. Le pays de l'adresse indiquée dans ce cadre est l'État où le déposant a son domicile si aucun domicile n'est indiqué ci-dessous.)*

Cette personne est :
- [ ] déposant seulement
- [ ] déposant et inventeur
- [ ] inventeur seulement *(Si cette case est cochée, ne pas remplir la suite.)*

n° sous lequel le déposant est inscrit auprès de l'office

Nationalité *(nom de l'État)* :

Domicile *(nom de l'État)* :

Cette personne est déposant pour : [ ] tous les États désignés [ ] les États indiqués dans le cadre supplémentaire

[ ] D'autres déposants ou inventeurs sont indiqués sur une feuille annexe.

PCT/IB20 13 / 003 108

Feuille n° ...3...

Cadre n° V DÉSIGNATIONS

Le dépôt de la présente requête **vaut, selon la règle 4.9.a), désignation** de tous les États contractants liés par le PCT à la date du dépôt international, aux fins de la délivrance de tout titre de protection disponible et, le cas échéant, aux fins de la délivrance à la fois de brevets régionaux et nationaux.

Cependant,

☐ DE Allemagne **n'est désignée** pour aucun titre de protection nationale

☐ JP Japon **n'est désigné** pour aucun titre de protection nationale

☐ KR République de Corée **n'est désignée** pour aucun titre de protection nationale

(Les cases mentionnées ci-dessus peuvent seulement être utilisées pour exclure (irrévocablement) les désignations concernées si, au moment du dépôt ou ultérieurement en vertu de la règle 26bis.1, la demande internationale revendique dans le cadre n° VI la priorité d'une demande nationale antérieure déposée dans l'État considéré, afin d'éviter que cette demande nationale antérieure ne cesse de produire ses effets en vertu de la législation nationale.)

Cadre n° VI REVENDICATION DE PRIORITÉ ET DOCUMENT DE PRIORITÉ

La priorité de la ou des demandes antérieures suivantes est revendiquée :

Date de dépôt de la demande antérieure *(jour/mois/année)*	Numéro de la demande antérieure	Lorsque la demande antérieure est une :		
		demande nationale : pays ou membre de l'OMC	demande régionale : office régional	demande internationale : office récepteur
point 1)				
point 2)				
point 3)				

☐ D'autres revendications de priorité sont indiquées dans le cadre supplémentaire.

Remise du(des) document(s) de priorité :

☐ **L'office récepteur** est prié d'établir et de transmettre au Bureau international une copie certifiée conforme de la ou des demandes antérieures *(uniquement si la ou les demandes antérieures ont été déposées auprès de l'office récepteur qui, aux fins de la présente demande internationale, est l'office récepteur)* indiquées ci-dessus sous :

☐ tous les points ☐ le point 1) ☐ le point 2) ☐ le point 3) ☐ autre, voir le cadre supplémentaire

☐ **Le Bureau international** est prié de se procurer auprès d'une bibliothèque numérique, le cas échéant, au moyen du (des) code(s) d'accès mentionné(s) ci-dessous, une copie certifiée conforme de la ou des demandes antérieures *(si la ou les demandes antérieures sont accessibles au Bureau international auprès d'une bibliothèque numérique)* indiquées ci-dessus sous :

☐ le point 1) code d'accès _____ ☐ le point 2) code d'accès _____ ☐ le point 3) code d'accès _____ ☐ autre, voir le cadre supplémentaire

Restaurer le droit de priorité : il est demandé à l'office récepteur de restaurer le droit de priorité concernant la ou les demandes antérieures indiquées plus haut ou dans le cadre supplémentaire sous les points _____. *(Voir également les notes relatives au cadre n° VI; des renseignements complémentaires doivent être communiqués à l'appui de la requête en restauration du droit de priorité).*

Incorporation par renvoi : lorsqu'un élément de la demande internationale visé à l'article 11.1)iii) d) ou e) ou une partie de la description, des revendications ou des dessins visée à la règle 20.5.a) n'est pas contenu ailleurs dans cette demande internationale mais est intégralement contenu dans une demande antérieure dont la priorité est revendiquée à la date à laquelle un ou plusieurs des éléments visés à l'article 11.1)iii) ont été initialement reçus par l'office récepteur, cet élément ou cette partie est, sous réserve de la confirmation selon la règle 20.6, incorporé par renvoi dans cette demande internationale aux fins de la règle 20.6.

Cadre n° VII ADMINISTRATION CHARGÉE DE LA RECHERCHE INTERNATIONALE

Choix de l'administration chargée de la recherche internationale (ISA) *(si plus d'une administration chargée de la recherche internationale est compétente pour procéder à la recherche internationale, indiquer l'administration choisie; le code à deux lettres peut être utilisé)* :

ISA /EP

PCT/IB20 13 / 00 J 108

Feuille n° ...4...

Suite du Cadre n° VII **UTILISATION DES RÉSULTATS D'UNE RECHERCHE ANTÉRIEURE; MENTION DE CETTE RECHERCHE**

☐ L'administration chargée de la recherche internationale indiquée dans le cadre n° VII est priée de prendre en considération les résultats de la ou des recherches antérieures mentionnées ci-dessous *(voir également les notes relatives au cadre n° VII; utilisation des résultats de plus d'une recherche antérieure)*

Date de dépôt *(jour/mois/année)* Numéro de dépôt Pays *(ou office régional)*

☐ **Déclaration (règle 4.12.ii))** : la présente demande internationale est identique, ou pratiquement identique à la demande pour laquelle la recherche antérieure a été effectuée, mais, le cas échéant, elle a été déposée dans une langue différente.

☐ **Disponibilité des documents** : les documents suivants sont à la disposition de l'administration chargée de la recherche internationale sous une forme et d'une manière qu'elle accepte et, en conséquence, le déposant n'a pas à les fournir (règle 12*bis*.1.f))

- ☐ une copie des résultats de la recherche antérieure,*
- ☐ une copie de la demande antérieure,
- ☐ une traduction de la demande antérieure dans une langue acceptée par l'administration chargée de la recherche internationale,
- ☐ une traduction des résultats de la recherche antérieure dans une langue acceptée par l'administration chargée de la recherche internationale,
- ☐ une copie de tout document cité dans les résultats de la recherche antérieure. *(Si possible, indiquer ci-après le(s) document(s) disponible(s) pour l'administration chargée de la recherche internationale):*

☐ **Transmettre une copie des résultats de la recherche antérieure et d'autres documents** *(si la recherche antérieure n'a pas été effectuée par l'administration chargée de la recherche internationale mentionnée ci-dessus mais par l'office qui agit en tant qu'office récepteur)* : l'**office récepteur** est prié de préparer et de transmettre à l'administration chargée de la recherche internationale (règle 12*bis*.1.c)) :

- ☐ une copie des résultats de la recherche antérieure,*
- ☐ une copie de la demande antérieure,
- ☐ une copie de tout document cité dans les résultats de la recherche antérieure.

* Lorsque les résultats de la recherche antérieure ne sont ni disponibles auprès d'une bibliothèque numérique ni transmis par l'office récepteur, il appartient au déposant de les lui remettre (règle 12*bis*.1.a)). (voir également le point 11 du bordereau et les notes relatives au cadre n° VII)

Date de dépôt *(jour/mois/année)* Numéro de dépôt Pays *(ou office régional)*

☐ **Déclaration (règle 4.12.ii))** : la présente demande internationale est identique, ou pratiquement identique à la demande pour laquelle la recherche antérieure a été effectuée, mais, le cas échéant, elle a été déposée dans une langue différente.

☐ **Disponibilité des documents** : les documents suivants sont à la disposition de l'administration chargée de la recherche internationale sous une forme et d'une manière qu'elle accepte et, en conséquence, le déposant n'a pas à les fournir (règle 12*bis*.1.f)):

- ☐ une copie des résultats de la recherche antérieure,*
- ☐ une copie de la demande antérieure,
- ☐ une traduction de la demande antérieure dans une langue acceptée par l'administration chargée de la recherche internationale,
- ☐ une traduction des résultats de la recherche antérieure dans une langue acceptée par l'administration chargée de la recherche internationale,
- ☐ une copie de tout document cité dans les résultats de la recherche antérieure. *(Si possible, indiquer ci-après le(s) document(s) disponible(s) pour l'administration chargée de la recherche internationale):*

☐ **Transmettre une copie des résultats de la recherche antérieure et d'autres documents** *(si la recherche antérieure n'a pas été effectuée par l'administration chargée de la recherche internationale mentionnée ci-dessus mais par l'office qui agit en tant qu'office récepteur)* : l'**office récepteur** est prié de préparer et de transmettre à l'administration chargée de la recherche internationale (règle 12*bis*.1.c)) :

- ☐ une copie des résultats de la recherche antérieure,*
- ☐ une copie de la demande antérieure,
- ☐ une copie de tout document cité dans les résultats de la recherche antérieure.

* Lorsque les résultats de la recherche antérieure ne sont ni disponibles auprès d'une bibliothèque numérique ni transmis par l'office récepteur, il appartient au déposant de les lui remettre (règle 12*bis*.1.a)). (voir également le point 11 du bordereau et les notes relatives au cadre n° VII)

☐ D'autres recherches antérieures sont indiquées sur une feuille annexe.

Cadre n° VIII **DÉCLARATIONS**

Les **déclarations** suivantes figurent dans les cadres n° VIII.i) à v) *(cocher ci-dessous la ou les cases appropriées et indiquer dans la colonne de droite le nombre de chaque type de déclaration)* :			Nombre de déclarations
☐	cadre n° VIII.i)	déclaration relative à l'identité de l'inventeur	:
☐	cadre n° VIII.ii)	déclaration relative au droit du déposant, à la date du dépôt international, de demander et d'obtenir un brevet	:
☐	cadre n° VIII.iii)	déclaration relative au droit du déposant, à la date du dépôt international, de revendiquer la priorité d'une demande antérieure	:
☐	cadre n° VIII.iv)	déclaration relative à la qualité d'inventeur (seulement aux fins de la désignation des États-Unis d'Amérique)	:
☐	cadre n° VIII.v)	déclaration relative à des divulgations non opposables ou à des exceptions au défaut de nouveauté	:

PCT/IB20 13 / 00 J 108

Feuille n° ...5...

Cadre n° IX **BORDEREAU relatif aux dépôts sur PAPIER** – cette feuille doit être utilisée exclusivement en cas de dépôt d'une demande internationale sur **PAPIER**

La présente demande internationale **contient les éléments suivants:**	Nombre de feuilles
a) formulaire de requête (PCT/RO/101) (y compris la ou les déclarations et les feuilles supplémentaires)	5
b) description (à l'exception de la partie de la description réservée au listage des séquences, (voir le point f), ci-dessous)	8
c) revendications	2
d) abrégé	1
e) dessins (le cas échéant)	2
f) partie de la description réservée au listage des séquences (le cas échéant)	
Nombre total de feuilles	18

Le ou les éléments suivants sont **joints** à la présente demande internationale *(cocher la ou les cases appropriées et indiquer dans la colonne de droite le nombre de chaque élément)* :

	Nombre d'éléments
1. ☒ feuille de calcul des taxes	1
2. ☐ original du pouvoir distinct	
3. ☐ original du pouvoir général	
4. ☐ copie du pouvoir général; le cas échéant, numéro de référence :	
5. ☐ document(s) de priorité indiqué(s) dans le cadre n° VI au(x) point(s)	
6. ☐ traduction de la demande internationale en *(langue)* :	
7. ☐ indications séparées concernant des micro-organismes ou autre matériel biologique déposés	
8. ☐ copie sous forme électronique du listage des séquences ne faisant pas partie de la demande internationale (en format texte selon la norme de l'annexe C/ST.25), sur support(s) matériel(s), qui est remise **exclusivement aux fins de la recherche internationale** en vertu de la règle 13*ter* *(indiquer type et nombre de supports)*	
9. ☐ avec la déclaration quant à "l'identité entre le contenu de la copie remise sous forme électronique, selon la règle 13*ter*, et celui du listage des séquences contenu dans la demande internationale" telle que déposée sur papier	
10. ☐ copie des résultats de la recherche antérieure (règle 12*bis*.1.a))	
11. ☐ autres éléments *(préciser)* :	

Figure des dessins qui doit accompagner l'abrégé : 1

Langue de dépôt de la demande internationale : FRANCAIS

Cadre n° X **SIGNATURE DU DÉPOSANT, DU MANDATAIRE OU DU REPRÉSENTANT COMMUN**

À côté de chaque signature, indiquer le nom du signataire et à quel titre l'intéressé signe (si cela n'apparaît pas clairement à la lecture de la requête).

Thônex, le 30 janvier 2013

MICHELI & CIE SA

Christelle MOULIN Bernard MAYJONADE

Mayjonade

Réservé à l'office récepteur

1. Date effective de réception des pièces supposées constituer la demande internationale : 30 JANUARY 2013 (30.01.2013)
2. Dessins : ☐ reçus : ☐ non reçus :
3. Date effective de réception, rectifiée en raison de la réception ultérieure, mais dans les délais, de documents ou de dessins complétant ce qui est supposé constituer la demande internationale :
4. Date de réception, dans les délais, des corrections demandées selon l'article 11.2) du PCT :
5. Administration chargée de la recherche internationale (si plusieurs sont compétentes) : ISA / EP
6. ☐ Transmission de la copie de recherche différée jusqu'au paiement de la taxe de recherche

Réservé au Bureau international

Date de réception de l'exemplaire original par le Bureau international :

Instrument pour l'alésage des canaux radiculaires dentaires

La présente invention a pour objet un instrument pour l'alésage des canaux radiculaires dentaires.

Le traitement d'une racine dentaire infectée se réalise par l'extraction de la pulpe à l'aide d'instruments spécifiques, puis par la mise en forme du canal radiculaire au moyen d'alésages successifs, traditionnellement réalisés à l'aide d'instruments de taille et de conicité variables. Une dernière opération consiste à obturer le canal radiculaire.

La mise en forme du canal radiculaire consiste dans un premier temps à réaliser un élargissement du canal dans ses parties coronaire et médiane pour permettre dans un second temps de traiter la partie apicale du canal plus facilement par un nettoyage mécanique des tissus infectés.

Un instrument destiné à l'alésage des canaux radiculaires dentaires présente généralement une tige effilée emmanchée dans un manche pour permettre son entraînement manuel ou mécanique et comprenant sur au moins une partie de sa longueur des goujures hélicoïdales à pas constant ou non et présentant au moins une arête de coupe.

Utilisé en rotation continue, ce genre d'instrument peut avoir tendance à se visser dans le canal. Outre le vissage, un autre problème intervenant dans la réalisation d'instruments pour l'alésage des canaux radiculaires est celui de la résistance et de la flexibilité des instruments. En effet, lorsque l'instrument est trop flexible, il risque de se plier ou de se casser avant que le praticien ait pu terminer l'opération et lorsque l'instrument est trop rigide, il ne suit que difficilement la courbure du canal radiculaire dentaire.

De nombreux instruments ont été développés pour répondre à ces problèmes. Le document EP 1 361 831 décrit un instrument pour l'alésage des canaux dentaires comportant une base, un tronçon de coupe et un tronçon de guidage, le tronçon de coupe étant délimité par une enveloppe de forme

cylindrique ou conique dont l'axe longitudinal est confondu avec l'axe de rotation de l'instrument. Le tronçon de coupe présente des zones de dégagement disposées en retrait par rapport à l'enveloppe alternant avec des zones d'alésage disposées sur ladite enveloppe. Cette alternance de zones sur l'enveloppe et en retrait de l'enveloppe permet de réduire le risque de vissage de l'instrument dans le canal dentaire. De plus, l'axe du tronçon de coupe peut être décalé par rapport à l'axe de l'enveloppe. Cela permet d'approfondir les zones de dégagement et de rendre plus efficace l'évacuation des copeaux en cours de traitement.

Le document US 7 955 078 décrit un instrument endodontique pour la préparation des canaux radiculaires dentaires comprenant un corps configuré pour tourner autour d'un axe de rotation. Le corps comprend un centre de masse qui n'est pas situé sur l'axe de rotation de l'instrument permettant ainsi à l'instrument « d'aller et venir » (« swagger ») lors de sa mise en rotation. Un tel instrument présente une meilleure flexibilité et permet ainsi de suivre au mieux les courbes complexes d'un canal radiculaire dentaire.

Cependant, dans ces deux documents, l'axe de la partie active est décalé par rapport à l'axe de rotation de l'instrument sur toute la longueur de ladite partie active et en particulier, l'axe de la pointe de l'instrument est décalé. Cela peut générer un phénomène de battement de la pointe dans le canal. Il devient alors difficile d'assurer une dimension optimale du canal lors du traitement, notamment dans sa partie apicale. De plus, une pointe dont l'axe est décalé a encore comme inconvénient de repousser les débris vers la partie apicale plutôt que de les évacuer vers le haut du canal.

Le but de la présente invention est de réaliser un instrument pour l'alésage des canaux radiculaires dentaires qui obvie aux inconvénients précités. En particulier, un but de la présente invention est donc de réaliser un instrument qui soit flexible tout en étant résistant, fiable et efficace et qui permette à la fois de respecter la trajectoire initiale du canal radiculaire à traiter et de garantir une dimension optimale du canal dans sa partie apicale après traitement.

La présente invention a pour objet un instrument pour l'alésage des canaux radiculaires dentaires selon la revendication 1.

Les dessins illustrent schématiquement et à titre d'exemple plusieurs formes d'exécution de l'instrument selon l'invention.

La figure 1 illustre une première forme d'exécution d'un instrument pour l'alésage des canaux radiculaires dentaires selon l'invention.

La figure 2 est une vue en coupe selon la ligne II-II de l'instrument illustré à la figure 1.

La figure 3 est une vue en coupe selon la ligne III-III de l'instrument illustré à la figure 1.

La figure 4 est une vue en coupe selon la ligne IV-IV de l'instrument illustré à la figure 1.

La figure 5 illustre une seconde forme d'exécution d'un instrument pour l'alésage des canaux radiculaires dentaires selon l'invention.

La figure 6 est une vue en coupe selon la ligne VI-VI de l'instrument illustré à la figure 5.

La figure 7 est une vue en coupe selon la ligne VII-VII de l'instrument illustré à la figure 5.

Dans une première forme d'exécution illustrée à la figure 1, l'instrument selon l'invention comprend une tige 1 emmanchée à une de ses extrémités 1a dans un manche 2 permettant soit l'actionnement manuel de l'instrument soit, de préférence, son engagement dans une pièce à main assurant l'entraînement mécanique dudit instrument. En particulier, l'instrument 1 est destiné à être entraîné en rotation autour de son axe de rotation A.

La tige 1 présente une partie active 1b s'étendant jusqu'à l'autre extrémité 3, dite pointe 3, de la tige 1. Ladite partie active 1b est de préférence effilée et conique, s'amincissant jusqu'à la pointe 3 de la tige 1.

La partie active 1b présente une section polygonale (dont les côtés sont droits ou courbes) et comporte des arêtes de coupe. Plus particulièrement dans

cette première forme d'exécution, la partie active 1b présente sur toute sa longueur une section carrée 4 formant quatre arêtes de coupe 5a, 5b, 5c, 5d définissant entre elles quatre goujures 6 de forme hélicoïdale, une goujure étant la face définie entre deux arêtes de coupe successives de la partie active 1b. La partie active 1b est délimitée par une enveloppe 7 sensiblement tronconique et dont l'axe longitudinal est confondu avec l'axe de rotation A de l'instrument.

La particularité de l'instrument selon l'invention réside dans le fait que la partie active 1b présente une première portion 1c s'étendant à partir de la pointe 3 en direction de l'arrière de la partie active 1b et dont le centre de masse se trouve sur l'axe de rotation A de l'instrument et une seconde portion 1d s'étendant depuis la fin de la première portion 1c jusqu'à l'arrière de la partie active 1b et dont le centre de masse n'est pas sur l'axe de rotation A de l'instrument mais est décalé par rapport audit axe A.

Plus précisément et comme illustré à la figure 2, toute section 4a de la première portion 1c a son centre de masse ma sur l'axe de rotation A de l'instrument. De plus, les quatre arêtes 5a, 5b, 5c, 5d d'une telle section 4a se trouvent sur l'enveloppe 7. Ainsi, la première portion 1c et en particulier la pointe 3 sont centrées par rapport à l'axe de rotation A de l'instrument ou en d'autres termes encore, l'axe longitudinal de la première portion 1c est confondu avec ledit axe de rotation A.

Comme illustré sur les figures 3 et 4, toute section 4b de la seconde portion 1d de la partie active 1b a son centre de masse mb décalé par rapport à l'axe de rotation A de l'instrument et de préférence, une seule arête de coupe 5a d'une telle section 4b se trouve sur l'enveloppe 7, les autres arêtes de coupe 5b, 5c et 5d étant disposées à l'intérieur de ladite enveloppe 7. Ainsi, cette seconde portion 1d de la partie active 1b est décentrée par rapport à l'axe de rotation A de l'instrument.

Ainsi, on obtient un instrument efficace car sa pointe 3 est centrée, ne génère pas de battement dans le canal et présente quatre arêtes de coupe actives.

Un tel instrument selon l'invention peut être obtenu à partir d'une tige de section circulaire, de préférence en un alliage de nickel titane, en y ménageant par usinage (meulage) des goujures hélicoïdales définissant des arêtes de coupe de sorte que la section de la tige 1 soit polygonale sur toute la longueur de sa partie active 1b. Pour réaliser la géométrie particulière de la partie active 1b décrite ci-dessus, les goujures 6 de la seconde portion 1d de la partie active 1b sont surtaillées par rapport aux goujures 6 de la première portion 1c pour obtenir une section 4b dont une seule arête de coupe est sur l'enveloppe 7 et dont le centre de masse mb est décalé par rapport à l'axe de rotation A. Ainsi, sur la seconde portion 1d de la partie active 1b de la matière est retirée à l'instrument selon l'invention ce qui le rend plus flexible sur cette seconde portion qu'un instrument traditionnel qui présenterait une section dont le centre de masse est centré sur l'axe de rotation et dont toutes les arêtes sont inscrites sur l'enveloppe. Grâce à la présente invention, on obtient donc un instrument efficace à sa pointe 3 tout en étant flexible.

De préférence, la seconde portion 1d présente un décalage progressif par rapport à l'axe de rotation A en direction de l'arrière de l'instrument : c'est-à-dire qu'une section de la seconde portion 1d proche de la pointe a son centre de masse moins décalé proportionnellement à la surface de la section par rapport audit axe de rotation A qu'une section de la seconde portion 1d plus proche de l'arrière de l'instrument. En terme d'usinage de l'instrument, cela se traduit par des goujures 6 proportionnellement de plus en plus surtaillées le long de la seconde portion 1d de la partie active 1b par rapport au goujures de la première portion 1c. Ainsi, la flexibilité de l'instrument est ajustable et en particulier, augmente progressivement vers l'arrière de la partie active 1b.

De préférence également, la première portion 1c de la partie active s'étend sur une longueur de 3 millimètres partant de la pointe 3 de la partie active 1b. De manière encore plus privilégiée, ladite première portion 1c a une longueur de 1 millimètre.

Les figures 5 à 7 illustrent une seconde forme d'exécution d'un instrument selon l'invention dans laquelle la partie active 1b présente sur toute sa longueur une section rectangulaire 4' formant quatre arêtes de coupe 5a, 5b, 5c, 5d définissant quatre goujures 6 de forme hélicoïdale, une goujure étant la face définie entre deux arêtes de coupe successives de la partie active 1b. Comme dans la première forme d'exécution, la partie active 1b est délimitée par une enveloppe 7 sensiblement tronconique et ayant pour axe longitudinal l'axe de rotation A de l'instrument.

La partie active 1b présente également une première portion 1c s'étendant depuis la pointe 3 en direction de l'arrière de la partie active 1b et dont le centre de masse se trouve sur l'axe de rotation A de l'instrument et une seconde portion 1d s'étendant depuis la fin de la première portion 1c jusqu'à l'arrière de la partie active 1b dont le centre de masse est décalé par rapport à l'axe de rotation A de l'instrument.

Dans cette deuxième forme d'exécution et comme illustré à la figure 6, toute section 4'a de la première portion 1c est carrée et a son centre de masse m'a sur l'axe de rotation A de l'instrument. De plus, les quatre arêtes 5a, 5b, 5c, 5d d'une telle section 4'a se trouvent sur l'enveloppe 7 de l'instrument. Comme illustré sur la figure 7, toute section 4'b de la seconde portion 1d de la partie active 1b a son centre de masse m'b décalé par rapport à l'axe de rotation A de l'instrument. Contrairement à la première forme d'exécution, pour chaque section 4'b de la seconde portion 1d de la partie active 1c de l'instrument selon la seconde forme d'exécution deux arêtes de coupe 5a et 5b sont sur l'enveloppe 7, les deux autres arêtes de coupe 5c et 5d étant disposées à l'intérieur de ladite enveloppe 7.

Les autres considérations se rapportant à la première forme d'exécution restent valables pour cette seconde forme d'exécution.

Comme illustré aux figures 6 et 7, les sections 4'a et 4'b des première et seconde portions 1c, 1d ne sont pas forcément symétriques, la section 4'a étant de préférence carrée tandis que la section 4'b peut être rectangulaire.

Les formes d'exécution présentées ci-dessus décrivent des sections polygonales dont les côtés sont droits. Il est évident que lesdits côtés pourraient être courbes. Par conséquent, il faut comprendre le terme « polygonal » dans son sens général signifiant « qui a plusieurs angles » et couvrant indifféremment une forme géométrique dont les côtés sont droits ou courbes.

De façon évidente, l'instrument selon l'invention pourrait présenter d'autres caractéristiques connues comme une conicité variable. De même, les goujures peuvent être orientées indifféremment à droite ou à gauche ou encore présenter un pas d'hélice variable.

De manière générale, la partie active d'un instrument selon l'invention présente sur toute sa longueur une section polygonale formant au moins deux arêtes de coupe. La partie active est délimitée par une enveloppe essentiellement conique dont l'axe longitudinal est confondu avec l'axe de rotation de l'instrument. La partie active comporte une première portion s'étendant depuis la pointe de l'instrument et qui est telle que toute section de cette première portion a son centre de masse sur l'axe de l'enveloppe et définit au moins deux arêtes de coupe qui se trouvent toutes sur ladite enveloppe. La partie active comporte en outre une seconde portion s'étendant à la suite de la première portion vers l'arrière de la partie active et qui est telle que toute section de cette seconde portion a un centre de masse qui n'est pas sur l'axe de l'enveloppe mais qui est décalé par rapport à cet axe et définit des arêtes de coupe dont au moins une se trouve sur l'enveloppe et au moins une se trouve en retrait à l'intérieur de ladite enveloppe.

L'instrument selon l'invention présente donc une pointe centrée par rapport à l'axe de rotation de l'instrument et une partie arrière décentrée. La pointe

centrée permet de respecter la trajectoire initiale du canal radiculaire, d'éviter tout phénomène de battement dans ledit canal et ainsi d'assurer la dimension de la préparation de la partie apicale du canal. De plus, la pointe centrée évite la descente des débris vers ladite partie apicale du canal et contribue à leur bonne évacuation. Cette évacuation est encore facilitée par le fait que la partie arrière est décentrée : les débris ont en effet plus de place pour être entraînés hors du canal et le décentrage de la partie arrière de l'instrument crée un effet dynamique qui remonte les débris hors du canal.

De plus, un instrument selon la présente invention permet d'assurer la résistance de la partie proche de la pointe pour ainsi diminuer le risque de casse de l'instrument dans sa portion la plus fragile. La flexibilité de l'instrument n'est pas pour autant sacrifiée, puisque la seconde portion décentrée de l'instrument rend celui-ci flexible et que cette flexibilité peut même être progressive en allant vers l'arrière de l'instrument en ajustant le décentrage de la seconde portion de la partie active de l'instrument. Ainsi, l'instrument est suffisamment flexible pour suivre le contour complexe d'un canal radiculaire dentaire.

Finalement, toutes les arêtes de coupe de l'instrument sont actives à la pointe de l'instrument puisqu'elles se trouvent toutes sur l'enveloppe, ce qui garantit la bonne efficacité de l'instrument. A l'arrière les zones de contact de l'instrument sont diminuées puisque certaines des arêtes sont situées en retrait dans l'enveloppe de l'instrument ce qui permet de diminuer l'effet de vissage et les efforts superflus sur la partie arrière de l'instrument.

Ainsi, on réalise un instrument performant présentant un bon équilibre entre efficacité, flexibilité et résistance à la casse et à l'effet de vissage.

Revendications

1. Instrument pour l'alésage des canaux radiculaires dentaires comprenant une tige effilée (1) présentant sur au moins une partie de sa longueur, appelée partie active (1b), une section polygonale (4) formant au moins deux arêtes de coupe (5a, 5b), ladite partie active (1b) se terminant par une pointe (3) et étant délimitée par une enveloppe de forme cylindrique ou conique dont l'axe longitudinal est confondu avec l'axe de rotation (A) de l'instrument, caractérisé en ce que ladite partie active (1b) comporte une première portion (1c) s'étendant depuis la pointe (3) et une seconde portion (1d) s'étendant à la suite de la première portion (1c) vers l'arrière de la partie active (1b) ; par le fait que toute section (4a) de la première portion (1c) présente un centre de masse (ma) situé sur l'axe de rotation (A) et que lesdites au moins deux arêtes de coupe (5a, 5b) définies par ladite section (4a) se trouvent sur l'enveloppe (7) ; et par le fait que toute section (4b) de la seconde portion (1d) présente un centre de masse (mb) décalé par rapport à l'axe de rotation (A) et au moins une arête de coupe (5a) définie par ladite section (4b) est située en retrait à l'intérieur de l'enveloppe (7).

2. Instrument selon la revendication 1, caractérisé par le fait qu'exactement une arête de coupe (5a) définie par toute section (4b) de la seconde portion (1d) de la partie active (1b) se trouve sur l'enveloppe (7) .

3. Instrument selon l'une des revendications précédentes, caractérisé par le fait que la partie active (1b) présente sur toute sa longueur une section polygonale à côté droit.

4. Instrument selon l'une des revendications précédentes, caractérisé par le fait que la première portion (1c) de la partie active (1b) a une longueur comprise entre 1 et 3 millimètres.

5. Instrument selon l'une des revendications précédente, caractérisé par le fait qu'une section (4b) de la seconde portion (1d) de la partie active (1b) située proche de la pointe (3) présente un centre de masse (mb) proportionnellement plus proche de l'axe de rotation (A) que le centre de masse d'une section de ladite seconde portion (1d) située à l'arrière de la partie active (1b).

6. Instrument selon l'une des revendications précédentes, caractérisé par le fait que la partie active (1b) présente sur toute sa longueur une section carrée définissant quatre arêtes de coupe (5a, 5b, 5c, 5d).

7. Instrument selon l'une des revendications 1 à 5, caractérisé par le fait que la première portion (1c) de la partie active (1b) présente une section carrée et que la seconde portion (1d) de la partie active présente une section rectangulaire.

Abrégé

La présente invention se rapporte à un instrument pour l'alésage des canaux radiculaires dentaires comprenant une tige effilée (1) présentant sur au moins une partie de sa longueur, appelée partie active (1b), une section polygonale (4) formant au moins deux arêtes de coupe (5a, 5b), ladite partie active (1b) se terminant par une pointe (3) et étant délimitée par une enveloppe de forme cylindrique ou conique dont l'axe longitudinal est confondu avec l'axe de rotation (A) de l'instrument. Ladite partie active (1b) comporte une première portion (1c) s'étendant depuis la pointe (3) et une seconde portion (1d) s'étendant à la suite de la première portion (1c) vers l'arrière de la partie active (1b). Toute section (4a) de la première portion (1c) présente un centre de masse (ma) situé sur l'axe de rotation (A) et lesdites arêtes de coupe (5a, 5b) définies par ladite section (4a) se trouvent sur l'enveloppe (7). Toute section (4b) de la seconde portion (1d) présente un centre de masse (mb) décalé par rapport à l'axe de rotation (A) et au moins une arête de coupe (5a) définie par ladite section (4b) est située en retrait à l'intérieur de l'enveloppe (7).

(Figure 1)

Fig.1

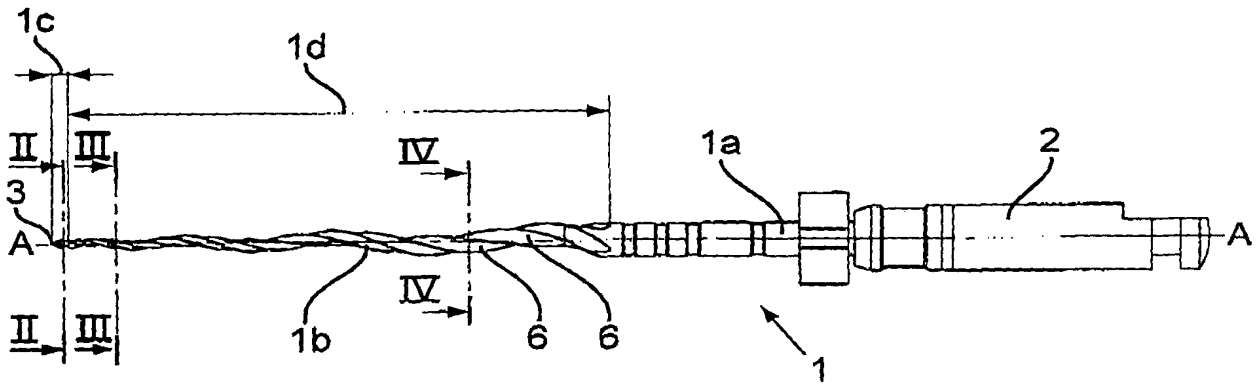

Fig.2

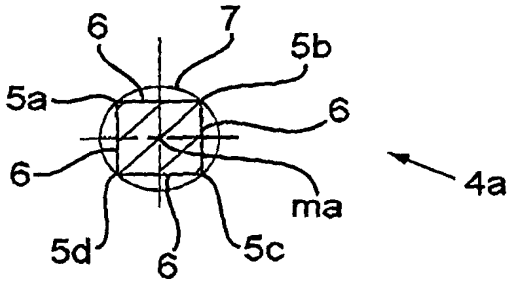

Fig.3

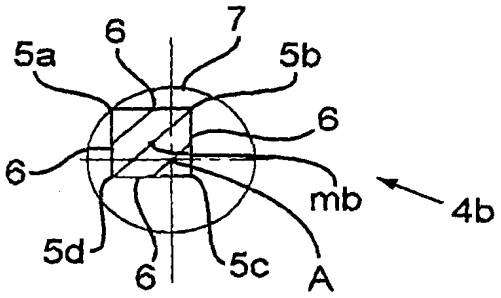

Fig.4

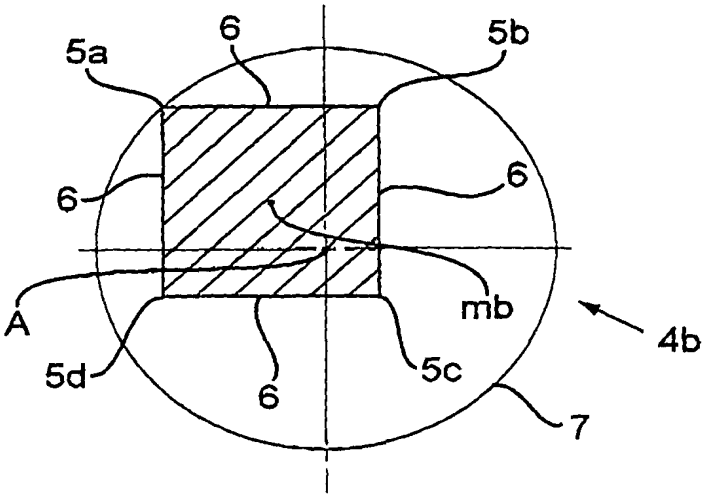

Fig.5

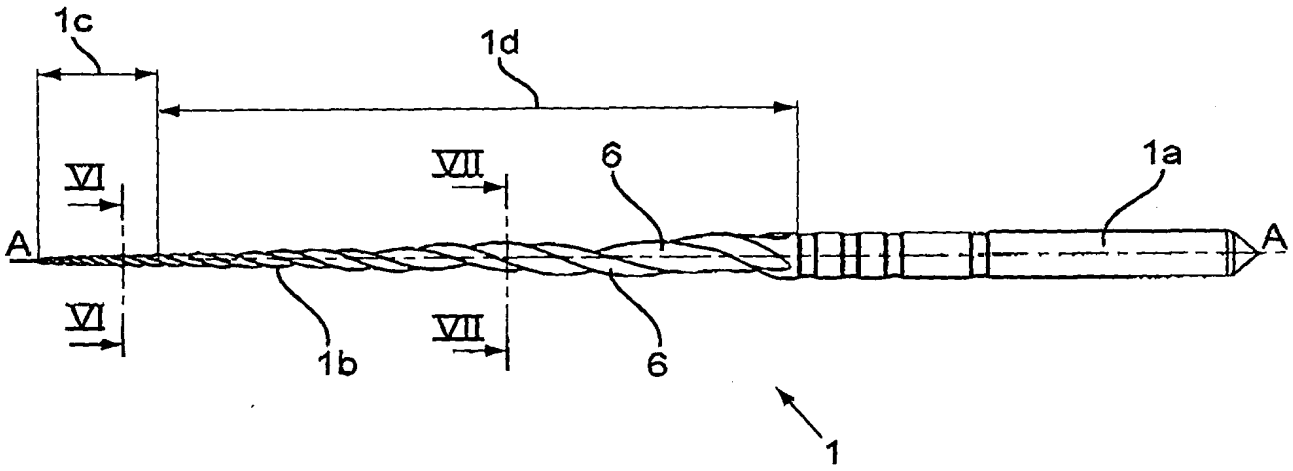

Fig.6

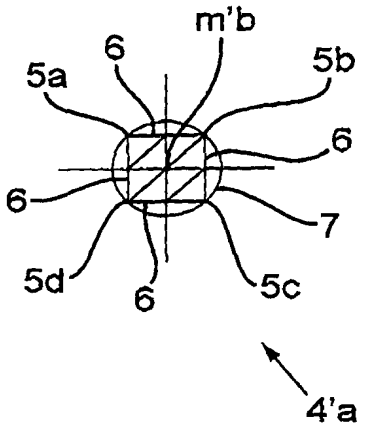

Fig.7

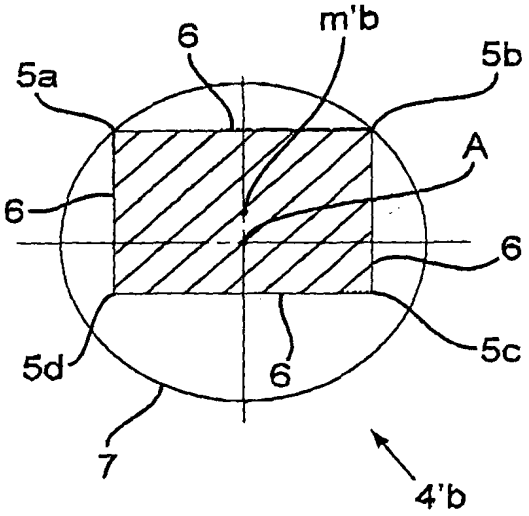

WIPO
WORLD
INTELLECTUAL PROPERTY
ORGANIZATION

DOCUMENT MADE AVAILABLE UNDER THE PATENT COOPERATION TREATY (PCT)

International application number:		**PCT/IB2013/001191**
International filing date:		**07 June 2013 (07.06.2013)**
Document type:		**Certified copy of priority document**
Document details:	Country/Office:	**IB**
	Number:	**PCT/IB2013/000108**
	Filing date:	**30 January 2013 (30.01.2013)**
Date of receipt at the International Bureau:		**10 June 2013 (10.06.2013)**

Remark: Priority document submitted or transmitted to the International Bureau in compliance with Rule 17.1(a),(b) or (b-*bis*)

34, chemin des Colombettes
1211 Geneva 20, Switzerland
www.wipo.int

(12) DEMANDE INTERNATIONALE PUBLIÉE EN VERTU DU TRAITÉ DE COOPÉRATION EN MATIÈRE DE BREVETS (PCT)

(19) Organisation Mondiale de la Propriété Intellectuelle
Bureau international

(43) Date de la publication internationale
7 août 2014 (07.08.2014)

WIPO | PCT

(10) Numéro de publication internationale
WO 2014/118591 A1

(51) Classification internationale des brevets : *A61C 5/02* (2006.01)

(21) Numéro de la demande internationale : PCT/IB2013/001191

(22) Date de dépôt international : 7 juin 2013 (07.06.2013)

(25) Langue de dépôt : français

(26) Langue de publication : français

(30) Données relatives à la priorité : PCT/IB2013/000108
30 janvier 2013 (30.01.2013) IB

(71) Déposant : **MAILLEFER INSTRUMENTS HOLDING SARL** [CH/CH]; Chemin du Verger 3, CH-1338 Ballaigues (CH).

(72) Inventeurs : **ROTA, Gilbert**; 8 rue Pré Jean, F-25160 Vaux et Chantegrue (FR). **VALLOTTON, Paul-Henri**; Rue du Melley 22 C, CH-1142 Pampigny (FR).

(74) Mandataire : **MICHELI & CIE SA**; 122, rue de Genève, C.P. 61, CH-1226 Thônex (CH).

(81) États désignés *(sauf indication contraire, pour tout titre de protection nationale disponible)* : AE, AG, AL, AM, AO, AT, AU, AZ, BA, BB, BG, BH, BN, BR, BW, BY, BZ, CA, CH, CL, CN, CO, CR, CU, CZ, DE, DK, DM, DO, DZ, EC, EE, EG, ES, FI, GB, GD, GE, GH, GM, GT, HN, HR, HU, ID, IL, IN, IS, JP, KE, KG, KN, KP, KR, KZ, LA, LC, LK, LR, LS, LT, LU, LY, MA, MD, ME, MG, MK, MN, MW, MX, MY, MZ, NA, NG, NI, NO, NZ, OM, PA, PE, PG, PH, PL, PT, QA, RO, RS, RU, RW, SC, SD, SE, SG, SK, SL, SM, ST, SV, SY, TH, TJ, TM, TN, TR, TT, TZ, UA, UG, US, UZ, VC, VN, ZA, ZM, ZW.

(84) États désignés *(sauf indication contraire, pour tout titre de protection régionale disponible)* : ARIPO (BW, GH, GM, KE, LR, LS, MW, MZ, NA, RW, SD, SL, SZ, TZ, UG, ZM, ZW), eurasien (AM, AZ, BY, KG, KZ, RU, TJ, TM), européen (AL, AT, BE, BG, CH, CY, CZ, DE, DK, EE, ES, FI, FR, GB, GR, HR, HU, IE, IS, IT, LT, LU, LV, MC, MK, MT, NL, NO, PL, PT, RO, RS, SE, SI, SK, SM, TR), OAPI (BF, BJ, CF, CG, CI, CM, GA, GN, GQ, GW, KM, ML, MR, NE, SN, TD, TG).

Publiée :

— *avec rapport de recherche internationale (Art. 21(3))*

(54) Title : INSTRUMENT FOR BORING DENTAL ROOT CANALS

(54) Titre : INSTRUMENT POUR L'ALESAGE DES CANAUX RADICULAIRES DENTAIRES

Fig.1

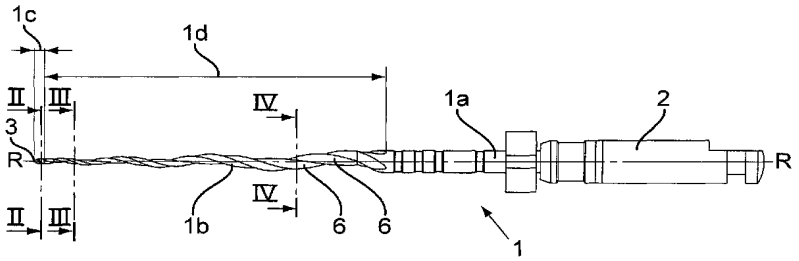

(57) Abstract : The invention relates to an instrument for boring dental root canals, comprising a thin rod (1) having, at least over part of the length thereof, a polygonal section (4) forming at least two cutting edges (5a, 5b) ending in a tip (3). Said length of the instrument has a first portion (1c) extending from the tip (3) and a second portion (1d) following on from the first portion (1c). At least one section (4a) of the first portion (1c) has a centre of mass (ma) located on the rotational axis. Every section (4b) of the second portion (1d) has a centre of mass (mb) that is offset in relation to the rotational axis and at least one cutting edge (5a) defined by said section (4b) is set back.

(57) Abrégé : Instrument pour l'alésage des canaux radiculaires dentaires comprenant une tige effilée (1) présentant sur au moins une partie de sa longueur, une section polygonale (4) formant au moins deux arêtes de coupe (5a, 5b) se terminant par une pointe (3). Ladite longueur de l'instrument comporte une première portion (1c) s'étendant depuis la pointe (3) et une seconde portion (1d) s'étendant à la suite de la première portion (1c). Au moins une section (4a) de la première portion (1c) présente un centre de masse (ma) situé sur l'axe de rotation. Toute section (4b) de la seconde portion (1d) présente un centre de masse (mb) décalé par rapport à l'axe de rotation et au moins une arête de coupe (5a) définie par ladite section (4b) est située en retrait.

WO 2014/118591 A1

Instrument pour l'alésage des canaux radiculaires dentaires

La présente invention a pour objet un instrument pour l'alésage des canaux radiculaires dentaires.

Le traitement d'une racine dentaire infectée se réalise par l'extraction de la pulpe à l'aide d'instruments spécifiques, puis par la mise en forme du canal radiculaire au moyen d'alésages successifs, traditionnellement réalisés à l'aide d'instruments de taille et de conicité variables. Une dernière opération consiste à obturer le canal radiculaire.

La mise en forme du canal radiculaire consiste dans un premier temps à réaliser un élargissement du canal dans ses parties coronaire et médiane pour permettre dans un second temps de traiter la partie apicale du canal plus facilement par un nettoyage mécanique des tissus infectés.

Un instrument destiné à l'alésage des canaux radiculaires dentaires présente généralement une tige effilée emmanchée dans un manche pour permettre son entraînement manuel ou mécanique et comprenant sur au moins une partie de sa longueur des goujures hélicoïdales à pas constant ou non et présentant au moins une arête de coupe.

Utilisé en rotation continue, ce genre d'instrument peut avoir tendance à se visser dans le canal. Outre le vissage, un autre problème intervenant dans la réalisation d'instruments pour l'alésage des canaux radiculaires est celui de la résistance et de la flexibilité des instruments. En effet, lorsque l'instrument est trop flexible, il risque de se plier ou de se casser avant que le praticien ait pu terminer l'opération et lorsque l'instrument est trop rigide, il ne suit que difficilement la courbure du canal radiculaire dentaire.

De nombreux instruments ont été développés pour répondre à ces problèmes. Le document EP 1 361 831 décrit un instrument pour l'alésage des canaux dentaires comportant une base, un tronçon de coupe et un tronçon de guidage, le tronçon de coupe étant délimité par une enveloppe de forme

cylindrique ou conique dont l'axe longitudinal est confondu avec l'axe de rotation de l'instrument. Le tronçon de coupe présente des zones de dégagement disposées en retrait par rapport à l'enveloppe alternant avec des zones d'alésage disposées sur ladite enveloppe. Cette alternance de zones sur l'enveloppe et en retrait de l'enveloppe permet de réduire le risque de vissage de l'instrument dans le canal dentaire. De plus, l'axe du tronçon de coupe peut être décalé par rapport à l'axe de l'enveloppe. Cela permet d'approfondir les zones de dégagement et de rendre plus efficace l'évacuation des copeaux en cours de traitement.

Le document US 7 955 078 décrit un instrument endodontique pour la préparation des canaux radiculaires dentaires comprenant un corps configuré pour tourner autour d'un axe de rotation. Le corps comprend un centre de masse qui n'est pas situé sur l'axe de rotation de l'instrument donnant ainsi à l'instrument une impression d'ondulation (« swagger ») lors de sa mise en rotation. Un tel instrument présente une meilleure flexibilité et permet ainsi de suivre au mieux les courbes complexes d'un canal radiculaire dentaire.

Cependant, dans ces deux documents, l'axe de la partie active est décalé par rapport à l'axe de rotation de l'instrument sur toute la longueur de ladite partie active et en particulier, l'axe de la pointe de l'instrument est décalé. Cela peut générer un phénomène de battement de la pointe dans le canal. Il devient alors difficile d'assurer une dimension optimale du canal lors du traitement, notamment dans sa partie apicale. De plus, une pointe dont l'axe est décalé a encore comme inconvénient de repousser les débris vers la partie apicale plutôt que de les évacuer vers le haut du canal.

Le but de la présente invention est de réaliser un instrument pour l'alésage des canaux radiculaires dentaires qui obvie aux inconvénients précités. En particulier, un but de la présente invention est donc de réaliser un instrument qui soit flexible tout en étant résistant, fiable et efficace et qui permette à la fois de respecter la trajectoire initiale du canal radiculaire à traiter et de garantir une dimension optimale du canal dans sa partie apicale après traitement.

La présente invention a pour objet un instrument pour l'alésage des canaux radiculaires dentaires selon la revendication 1.

Les dessins illustrent schématiquement et à titre d'exemple plusieurs formes d'exécution de l'instrument selon l'invention.

La figure 1 illustre une première forme d'exécution d'un instrument pour l'alésage des canaux radiculaires dentaires selon l'invention.

La figure 2 est une vue en coupe selon la ligne II-II de l'instrument illustré à la figure 1.

La figure 3 est une vue en coupe selon la ligne III-III de l'instrument illustré à la figure 1.

La figure 4 est une vue en coupe selon la ligne IV-IV de l'instrument illustré à la figure 1.

La figure 5 illustre une seconde forme d'exécution d'un instrument pour l'alésage des canaux radiculaires dentaires selon l'invention.

La figure 6 est une vue en coupe selon la ligne VI-VI de l'instrument illustré à la figure 5.

La figure 7 est une vue en coupe selon la ligne VII-VII de l'instrument illustré à la figure 5.

La figure 8 illustre une troisième forme d'exécution d'un instrument pour l'alésage des canaux radiculaires dentaires selon l'invention.

La figure 9 est une vue en coupe selon la ligne A-A de l'instrument illustré à la figure 8.

La figure 10 est une vue en coupe selon la ligne B-B de l'instrument illustré à la figure 8.

La figure 11 est une vue en coupe selon la ligne C-C de l'instrument illustré à la figure 8.

La figure 12 est une vue en coupe selon la ligne D-D de l'instrument illustré à la figure 8.

La figure 13 est une vue en coupe selon la ligne E-E de l'instrument illustré à la figure 8.

La figure 14 est une vue en coupe selon la ligne F-F de l'instrument illustré à la figure 8.

Dans une première forme d'exécution illustrée à la figure 1, l'instrument selon l'invention comprend une tige 1 emmanchée à une de ses extrémités 1a dans un manche 2 permettant soit l'actionnement manuel de l'instrument soit, de préférence, son engagement dans une pièce à main assurant l'entraînement mécanique dudit instrument. En particulier, l'instrument 1 est destiné à être entraîné en rotation autour de son axe de rotation R.

La tige 1 présente une partie active 1b s'étendant jusqu'à l'autre extrémité 3, dite pointe 3, de la tige 1. Ladite partie active 1b est de préférence effilée et conique, s'amincissant jusqu'à la pointe 3 de la tige 1. En variante, la partie active 1b ou l'entier de la tige 1 pourraient être cylindriques plutôt que coniques.

La partie active 1b présente une section polygonale (dont les côtés sont droits ou courbes) et comporte des arêtes de coupe. Plus particulièrement dans cette première forme d'exécution, la partie active 1b présente sur toute sa longueur une section carrée 4 formant quatre arêtes de coupe 5a, 5b, 5c, 5d définissant entre elles quatre goujures 6 de forme hélicoïdale, une goujure étant la face définie entre deux arêtes de coupe successives de la partie active 1b. La partie active 1b est délimitée par une enveloppe 7 sensiblement tronconique et dont l'axe longitudinal est confondu avec l'axe de rotation R de l'instrument.

La particularité de l'instrument selon l'invention réside dans le fait que la partie active 1b présente une première portion 1c s'étendant à partir de la pointe 3 en direction de l'arrière de la partie active 1b et dont le centre de masse se trouve sur l'axe de rotation R de l'instrument et une seconde portion 1d s'étendant depuis la fin de la première portion 1c jusqu'à l'arrière de la partie active 1b et dont au moins une section présente un centre de masse qui n'est pas sur l'axe de rotation R de l'instrument mais est décalé par rapport audit axe R. Dans la première forme

d'exécution illustrée aux figures 1 à 4, toute section de la seconde portion 1d de la partie active 1b de l'instrument 1 présente un centre de masse qui n'est pas sur l'axe de rotation R mais qui est décalé par rapport audit axe.

Plus précisément et comme illustré à la figure 2, selon l'invention, toute section 4a de la première portion 1c a son centre de masse ma sur l'axe de rotation R de l'instrument. De plus, dans cette première forme d'exécution, les quatre arêtes 5a, 5b, 5c, 5d d'une telle section 4a se trouvent sur l'enveloppe 7. Ainsi, la première portion 1c et en particulier la pointe 3 sont centrées par rapport à l'axe de rotation R de l'instrument ou en d'autres termes encore, l'axe longitudinal de la première portion 1c est confondu avec ledit axe de rotation R.

Comme illustré sur les figures 3 et 4, dans la première forme d'exécution, toute section 4b de la seconde portion 1d de la partie active 1b a son centre de masse mb décalé par rapport à l'axe de rotation R de l'instrument et de préférence, une seule arête de coupe 5a d'une telle section 4b se trouve sur l'enveloppe 7, les autres arêtes de coupe 5b, 5c et 5d étant disposées à l'intérieur de ladite enveloppe 7. Ainsi, dans la première forme d'exécution, l'entier de la seconde portion 1d de la partie active 1b est décentré par rapport à l'axe de rotation R de l'instrument.

Ainsi, on obtient un instrument efficace car sa pointe 3 est centrée, ne génère pas de battement dans le canal et présente quatre arêtes de coupe actives.

Un tel instrument selon l'invention peut être obtenu à partir d'une tige de section circulaire, de préférence en un alliage de nickel titane, en y ménageant par usinage (meulage) des goujures hélicoïdales définissant des arêtes de coupe de sorte que la section de la tige 1 soit polygonale sur toute la longueur de sa partie active 1b. Pour réaliser la géométrie particulière de la partie active 1b selon l'invention, les goujures 6 de la seconde portion 1d de la partie active 1b sont surtaillées par rapport aux goujures 6 de la première portion 1c pour obtenir au moins une section 4b de ladite seconde portion 1d dont au moins une arête de

coupe est en retrait dans l'enveloppe 7 et dont le centre de masse mb est décalé par rapport à l'axe de rotation R. Ainsi, sur la seconde portion 1d de la partie active 1b de la matière est retirée à l'instrument selon l'invention ce qui le rend plus flexible sur cette seconde portion qu'un instrument traditionnel qui présenterait sur toute sa partie active une section dont le centre de masse est centré sur l'axe de rotation et dont toutes les arêtes sont inscrites sur l'enveloppe. Grâce à la présente invention, on obtient donc un instrument efficace à sa pointe 3 tout en étant flexible.

De préférence, dans la première forme d'exécution, la seconde portion 1d présente un décalage progressif par rapport à l'axe de rotation R en direction de l'arrière de l'instrument : c'est-à-dire qu'une section de la seconde portion 1d proche de la pointe a son centre de masse moins décalé proportionnellement à la surface de la section par rapport audit axe de rotation R qu'une section de la seconde portion 1d plus proche de l'arrière de l'instrument. En terme d'usinage de l'instrument, cela se traduit par des goujures 6 proportionnellement de plus en plus surtaillées le long de la seconde portion 1d de la partie active 1b par rapport au goujures de la première portion 1c. Ainsi dans cette première forme d'exécution, la flexibilité de l'instrument est ajustable et en particulier, augmente progressivement vers l'arrière de la partie active 1b.

De préférence également, la première portion 1c de la partie active s'étend sur une longueur de 3 millimètres partant de la pointe 3 de la partie active 1b. De manière encore plus privilégiée, ladite première portion 1c a une longueur de 1 millimètre.

Les figures 5 à 7 illustrent une seconde forme d'exécution d'un instrument selon l'invention dans laquelle la partie active 1b présente sur toute sa longueur une section rectangulaire 4' formant quatre arêtes de coupe 5a, 5b, 5c, 5d définissant quatre goujures 6 de forme hélicoïdale, une goujure étant la face définie entre deux arêtes de coupe successives de la partie active 1b. Comme dans la première forme d'exécution, la partie active 1b est délimitée par une

enveloppe 7 sensiblement tronconique et ayant pour axe longitudinal l'axe de rotation R de l'instrument.

La partie active 1b présente également une première portion 1c s'étendant depuis la pointe 3 en direction de l'arrière de la partie active 1b et dont le centre de masse se trouve sur l'axe de rotation R de l'instrument et une seconde portion 1d s'étendant depuis la fin de la première portion 1c jusqu'à l'arrière de la partie active 1b et dont au moins une section présente un centre de masse décalé par rapport à l'axe de rotation R de l'instrument. De préférence et comme dans la première forme d'exécution, toute section de la seconde portion 1d de l'instrument selon la seconde forme d'exécution présente un centre de masse décalé par rapport à l'axe de rotation R.

Dans cette deuxième forme d'exécution et comme illustré à la figure 6, toute section 4'a de la première portion 1c est carrée et a son centre de masse m'a sur l'axe de rotation R de l'instrument. De plus, les quatre arêtes 5a, 5b, 5c, 5d d'une telle section 4'a se trouvent sur l'enveloppe 7 de l'instrument. Comme illustré sur la figure 7, toute section 4'b de la seconde portion 1d de la partie active 1b a son centre de masse m'b décalé par rapport à l'axe de rotation R de l'instrument. Contrairement à la première forme d'exécution, pour chaque section 4'b de la seconde portion 1d de la partie active 1c de l'instrument selon la seconde forme d'exécution deux arêtes de coupe 5a et 5b sont sur l'enveloppe 7, les deux autres arêtes de coupe 5c et 5d étant disposées à l'intérieur de ladite enveloppe 7.

Les autres considérations se rapportant à la première forme d'exécution restent valables pour cette seconde forme d'exécution.

Comme illustré aux figures 6 et 7, les sections 4'a et 4'b des première et seconde portions 1c, 1d ne sont pas forcément symétriques, la section 4'a étant de préférence carrée tandis que la section 4'b peut être rectangulaire.

Les figures 8 à 14 illustrent une troisième forme d'exécution d'un instrument selon l'invention dans laquelle la partie active 1b de l'instrument présente sur toute sa longueur une section polygonale 40 de forme parallélogramme formant quatre

arêtes de coupe 51, 52, 53, 54 définissant quatre goujures 6 de forme hélicoïdale, une goujure étant la face définie entre deux arêtes de coupe successives de la partie active 1b. Comme dans les formes d'exécution précédente, la partie active 1b est délimitée par une enveloppe 7 sensiblement tronconique et ayant pour axe longitudinal l'axe de rotation R de l'instrument.

Selon l'invention, la partie active 1b présente une première portion 1c s'étendant depuis la pointe 3 en direction de l'arrière de la partie active 1b et dont le centre de masse se trouve sur l'axe de rotation R de l'instrument. Dans cette troisième forme d'exécution et comme illustré à la figure 9, toute section 40a de la première portion 1c est de forme parallélogramme et a son centre de masse $m_{40}a$ sur l'axe de rotation R de l'instrument. De plus, dans cette forme d'exécution, deux arêtes de coupe diagonalement opposées 52, 54 d'une telle section 40a se trouvent sur l'enveloppe 7 de l'instrument tandis que l'autre paire d'arêtes de coupe diagonalement opposées 51, 53 se trouve en retrait à l'intérieur de l'enveloppe 7.

Selon l'invention, la partie active 1b présente en outre une seconde portion 1d s'étendant depuis la fin de la première portion 1c jusqu'à l'arrière de la partie active 1b dont au moins une section comprend un centre de masse qui n'est pas sur l'axe de rotation R de l'instrument mais qui est décalé par rapport audit axe R. Dans la troisième forme d'exécution de l'invention et comme illustré aux figures 8 et 10 à 14, la seconde portion 1d présente en alternance des premières zones, dites zones décentrées 11, dans lesquelles toute section 401b présente un centre de masse $m_{401}b$ décalé par rapport à l'axe de rotation R de l'instrument et des secondes zones, dites zones centrées 12, dans lesquelles toute section 402b présente une centre de masse $m_{402}b$ se trouvant sur l'axe de rotation R de l'instrument. La zone de la seconde portion 1d directement adjacente à la première portion 1c de la partie active 1b de l'instrument est une zone décentrée 11 (voir figure 8).

Les figures 11 et 13 illustrent chacune une section 402b d'une zone centrée 12 située le long de la seconde portion 1d de la partie active 1b de l'instrument, tandis que les figures 10, 12 et 14 illustrent chacune une section 401b d'une zone décentrée 11 située le long de ladite seconde portion 1d.

De préférence et comme illustré aux figures 11 et 13, pour chaque section 402b d'une zone centrée 12, deux arêtes de coupe diagonalement opposées 52, 54 se trouvent sur l'enveloppe 7 de l'instrument tandis que l'autre paire d'arêtes de coupe diagonalement opposées 51, 53 se trouve en retrait à l'intérieur de l'enveloppe 7.

De même, de préférence et comme illustré aux figures 10, 12 et 14, pour chaque section 401b d'une zone décentrée 11, une seule arête de coupe 52, 54 appartenant à la paire d'arêtes de coupe diagonalement opposées 52, 54 se trouvant sur l'enveloppe le long de la première portion 1c de la partie active 1b de l'instrument se trouve sur l'enveloppe 7 de l'instrument tandis que les autres arêtes de coupe se trouvent en retrait à l'intérieur de l'enveloppe 7.

Ainsi, outre l'alternance entre les zones centrées 12 et décentrées 11 sur la seconde portion 1d de la partie active 1b de l'instrument, dans cette troisième forme d'exécution, ladite seconde portion 1d présente également une alternance entre les arêtes de coupe se trouvant sur l'enveloppe. La succession des zones différentes sur la seconde section 1d de l'instrument selon la troisième forme d'exécution peut donc être décrite comme suit :

- La première zone de la seconde portion 1d immédiatement adjacente à la première portion 1c de la partie active 1b de l'instrument est une zone décentrée 11. Pour chaque section 401b de cette zone décentré 11, seule l'une des deux arêtes de coupe diagonalement opposées 52, 54 se trouvant sur l'enveloppe 7 pour toute section 40a de la première portion 1c, dite première arête de coupe 52, se trouve sur l'enveloppe 7 de l'instrument, la seconde de ces arêtes de coupe 54 et la seconde paire d'arêtes de coupe

diagonalement opposées 51, 53 étant en retrait à l'intérieur de l'enveloppe 7 (figure 10) ;

- La deuxième zone est une zone centrée 12. Pour chaque section 402b de cette zone centrée 12, les première et seconde arêtes de coupe diagonalement opposées 52, 54 sont à nouveau sur l'enveloppe 7 de l'instrument, la seconde paire d'arêtes diagonalement opposées 51, 53 étant toujours en retrait à l'intérieur de l'enveloppe 7 (figure 11) ;
- La troisième zone est à nouveau une zone décentrée 11. Mais, dans cette zone, la seconde arête de coupe 54 diagonalement opposée à la première 52 et qui était en retrait dans l'enveloppe sur la première zone se trouve à présent sur l'enveloppe 7 tandis que la première arête de coupe 52 se trouve alors à l'intérieur de l'enveloppe 7, la seconde paire d'arêtes de coupe diagonalement opposées 51, 53 étant toujours en retrait à l'intérieur de l'enveloppe 7 (figure 12).

La zone suivante illustrée à la figure 13 est similaire à la première zone et l'alternance se poursuit ainsi le long de la seconde portion 1d de la partie active 1b de l'instrument.

Ainsi, l'instrument selon la troisième forme d'exécution présente deux arêtes de coupe 52, 54 qui se trouvent sur l'enveloppe pour toute section 40a de la première portion 1c de la partie active 1b et pour toute section 402b des zones centrées 12 de la seconde portion 1d de la partie active 1b mais dont au moins une des deux est en retrait dans l'enveloppe 7 pour toute section 401b d'une zone décentrée 11 de la seconde portion 1d, deux zones décentrées 11 séparées par une zone centrée 12 ne présentant pas la même arête de coupe sur l'enveloppe 7.

En variantes, la seconde paire d'arêtes de coupe diagonalement opposées 51, 53 pourrait se trouver sur l'enveloppe 7 de l'instrument pour toute section de la partie active 1b ou pour toute section de la première portion 1c ou pour toute section centrée 12 de la seconde portion 1d. La seconde paire d'arêtes de coupe

diagonalement opposées 51, 53 pourrait également suivre la même alternance décrite ci-dessus que la première paire d'arêtes de coupe 52, 54 le long de la seconde portion 1d de la partie active 1b de l'instrument.

Les autres considérations se rapportant aux deux premières formes d'exécution restent valables pour cette troisième forme d'exécution.

En particulier, la première portion 1c de la partie active s'étend de préférence sur une longueur de 3 millimètres partant de la pointe 3 de la partie active 1b. De manière encore plus privilégiée, ladite première portion 1c a une longueur de 1 millimètre.

Ainsi, tout comme dans les deux premières formes d'exécution décrites ci-dessus, l'instrument selon la troisième forme d'exécution est efficace puisqu'il présente une pointe 3 centrée qui ne génère pas de battements dans le canal et permet une mise en forme précise dudit canal. Ledit instrument est également flexible à l'arrière de par la présence des zones décentrées sur la seconde portion 1d de sa partie active 1b. Cependant, contrairement aux deux premières formes d'exécution dans lesquelles l'entier de la seconde portion 1d est décentré et donc risque de générer un phénomène de battement à l'arrière de l'instrument, l'alternance de zones centrées et décentrées telle que décrite dans la troisième forme d'exécution permet d'assurer la flexibilité de l'instrument tout en évitant les battements en garantissant la forme de l'enveloppe générée par l'instrument en rotation. Ainsi, l'instrument selon la troisième forme d'exécution conserve tous les avantages décrits en relation avec les deux premières formes d'exécution tout en diminuant le phénomène de battement à l'arrière de l'instrument, phénomène qui pourrait nuire à la précision et à la rapidité du traitement du canal radiculaire dentaire.

Les formes d'exécution présentées ci-dessus décrivent des sections polygonales dont les côtés sont droits. Il est évident que lesdits côtés pourraient être courbes. Par conséquent, il faut comprendre le terme « polygonal » dans son

sens général signifiant « qui a plusieurs angles » et couvrant indifféremment une forme géométrique dont les côtés sont droits ou courbes.

De façon évidente, l'instrument selon l'invention pourrait présenter d'autres caractéristiques connues comme une conicité variable. De même, les goujures peuvent être orientées indifféremment à droite ou à gauche ou encore présenter un pas d'hélice variable.

De manière générale, la partie active d'un instrument selon l'invention présente sur toute sa longueur une section polygonale formant au moins deux arêtes de coupe. La partie active est délimitée par une enveloppe essentiellement conique ou cylindrique dont l'axe longitudinal est confondu avec l'axe de rotation de l'instrument. La partie active comporte une première portion s'étendant depuis la pointe de l'instrument et qui est telle que toute section de cette première portion a son centre de masse sur l'axe de l'enveloppe et définit au moins deux arêtes de coupe qui se trouvent toutes sur ladite enveloppe. La partie active comporte en outre une seconde portion s'étendant à la suite de la première portion vers l'arrière de la partie active et qui est telle qu'au moins une section de cette seconde portion a un centre de masse qui n'est pas sur l'axe de l'enveloppe mais qui est décalé par rapport à cet axe et définit des arêtes de coupe dont au moins une se trouve sur l'enveloppe et au moins une se trouve en retrait à l'intérieur de ladite enveloppe.

L'instrument selon l'invention présente donc une pointe centrée par rapport à l'axe de rotation de l'instrument et une partie arrière dont au moins une section est décentrée. La pointe centrée permet de respecter la trajectoire initiale du canal radiculaire, d'éviter tout phénomène de battement dans ledit canal aux environs de la pointe et ainsi d'assurer la dimension de la préparation de la partie apicale du canal. De plus, la pointe centrée évite la descente des débris vers ladite partie apicale du canal et contribue à leur bonne évacuation. Cette évacuation est encore facilitée par le fait qu'au moins une section de la partie arrière est décentrée : les débris ont en effet plus de place pour être entraînés hors du canal

et le décentrage d'au moins une section de la partie arrière de l'instrument crée un effet dynamique qui remonte les débris hors du canal.

De plus, un instrument selon la présente invention permet d'assurer la résistance de la partie proche de la pointe pour ainsi diminuer le risque de casse de l'instrument dans sa portion la plus fragile. La flexibilité de l'instrument n'est pas pour autant sacrifiée, puisque la seconde portion présentant au moins une section décentrée de l'instrument rend celui-ci flexible et que cette flexibilité peut même être progressive en allant vers l'arrière de l'instrument soit en ajustant le décentrage de la seconde portion de la partie active de l'instrument comme décrit dans le cas de la première et la seconde formes d'exécution soit en alternant section centrée et section décentrée le long de la seconde portion de la partie active de l'instrument comme décrit dans la troisième forme d'exécution. Ainsi, l'instrument peut être rendu suffisamment flexible pour suivre le contour complexe d'un canal radiculaire dentaire.

Finalement, les arêtes de coupe actives à la pointe de l'instrument, c'est-à-dire celles qui se trouvent sur l'enveloppe, garantissent la bonne efficacité de l'instrument. A l'arrière, les zones de contact de l'instrument sont diminuées puisque certaines des arêtes sont situées en retrait dans l'enveloppe de l'instrument ce qui permet de diminuer l'effet de vissage et les efforts superflus sur la partie arrière de l'instrument.

Ainsi, on réalise un instrument performant présentant un bon équilibre entre efficacité, flexibilité et résistance à la casse et à l'effet de vissage.

Revendications

1. Instrument pour l'alésage des canaux radiculaires dentaires comprenant une tige effilée (1) présentant sur au moins une partie de sa longueur, appelée partie active (1b), une section polygonale (4) formant au moins deux arêtes de coupe (5a, 5b ; 52, 54), ladite partie active (1b) se terminant par une pointe (3) et étant délimitée par une enveloppe (7) de forme cylindrique ou conique dont l'axe longitudinal est confondu avec l'axe de rotation (R) de l'instrument, caractérisé en ce que ladite partie active (1b) comporte une première portion (1c) s'étendant depuis la pointe (3) et une seconde portion (1d) s'étendant à la suite de la première portion (1c) vers l'arrière de la partie active (1b) ; par le fait que toute section (4a ; 4'a ; 40a) de la première portion (1c) présente un centre de masse (ma ;m'a ; $m_{40}a$) situé sur l'axe de rotation (R) et que lesdites au moins deux arêtes de coupe (5a, 5b ; 52, 54) définies par ladite section (4a ; 4'a ; 40a) se trouvent sur l'enveloppe (7) ; et par le fait qu'au moins une section (4b ;4'b ;401b) de la seconde portion (1d) présente un centre de masse (mb ; m'b ; $m_{401}b$) décalé par rapport à l'axe de rotation (R) et au moins une arête de coupe (5a ; 52, 54) définie par ladite section (4b ;4'b ;401b) est située en retrait à l'intérieur de l'enveloppe (7).

2. Instrument selon la revendication 1, caractérisé par le fait que toute section (4b ;4'b) de la seconde portion (1d) présente un centre de masse (mb ;m'b) décalé par rapport à l'axe de rotation (R) et au moins une arête de coupe (5a) définie par ladite section (4b ;4'b) est située en retrait à l'intérieur de l'enveloppe (7).

3. Instrument selon la revendication 2, caractérisé par le fait qu'exactement une arête de coupe (5a) définie par toute section (4b) de la seconde portion (1d) de la partie active (1b) se trouve sur l'enveloppe (7).

4. Instrument selon l'une des revendications 2 ou 3, caractérisé par le fait qu'une section (4b) de la seconde portion (1d) de la partie active (1b) située proche de la pointe (3) présente un centre de masse (mb) proportionnellement plus proche de l'axe de rotation (R) que le centre de masse d'une section de ladite seconde portion (1d) située à l'arrière de la partie active (1b).

5. Instrument selon la revendication 1, caractérisé par le fait que la seconde portion (1d) comprend en alternance des zones centrées (12) dans lesquelles toute section (402b) présente un centre de masse ($m_{402}b$) sur l'axe de rotation (R) et lesdites au moins deux arêtes de coupe (52, 54) définies par ladite section (402b) se trouvent sur l'enveloppe (7) et des zones décentrées (11) dans lesquelles toute section (401b) présente un centre de masse ($m_{401}b$) décalé par rapport audit axe de rotation (R) et au moins une arête de coupe (52, 54) définie par ladite section (401b) est située en retrait à l'intérieur de l'enveloppe (7).

6. Instrument selon la revendication 5, caractérisé par le fait que les zones décentrées (11) alternent entre des premières zones dans lesquelles pour toute section (401b), une première (52) des au moins deux arêtes de coupe (52, 54) définies par ladite section est située en retrait à l'intérieur de l'enveloppe (7) tandis que la seconde (54) des au moins deux arêtes de coupe se trouve sur l'enveloppe (7) et

des secondes zones dans lesquelles pour toute section, la seconde (54) des au moins deux arêtes de coupe (52) définies par ladite section est située en retrait à l'intérieur de l'enveloppe (7) tandis que la première (52) se trouve sur l'enveloppe (7).

7. Instrument selon l'une des revendications précédentes, caractérisé par le fait que la partie active (1b) présente sur toute sa longueur une section polygonale à côté droit.

8. Instrument selon l'une des revendications précédentes, caractérisé par le fait que la première portion (1c) de la partie active (1b) présente une section carrée et que la seconde portion (1d) de la partie active présente une section rectangulaire.

9. Instrument selon l'une des revendications précédentes, caractérisé par le fait que la première portion (1c) de la partie active (1b) a une longueur comprise entre 1 et 3 millimètres.

Fig.1

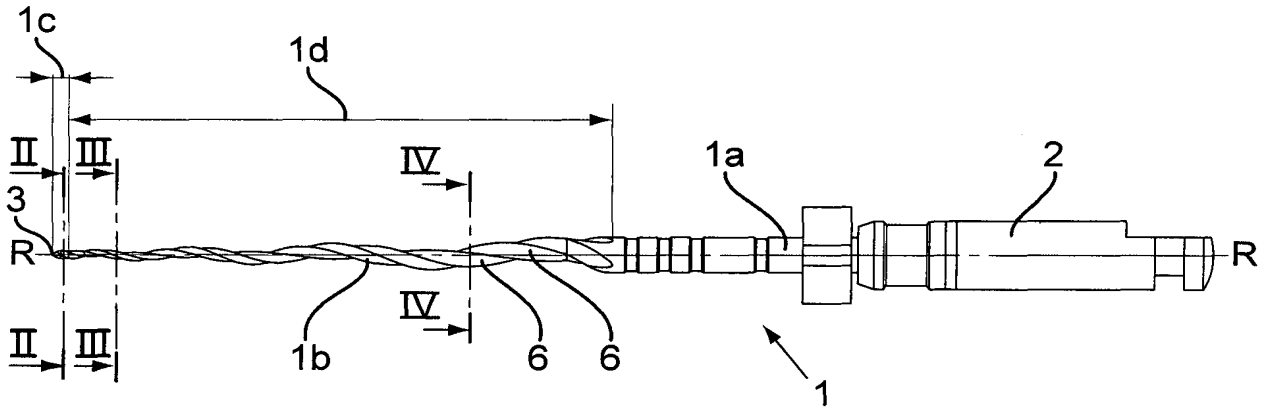

Fig.2

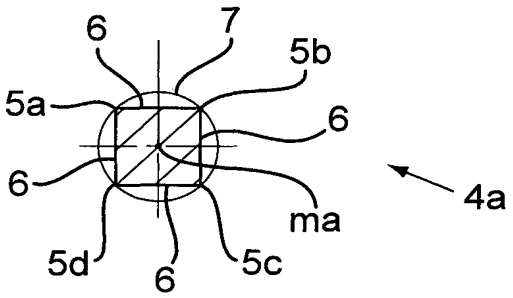

Fig.3

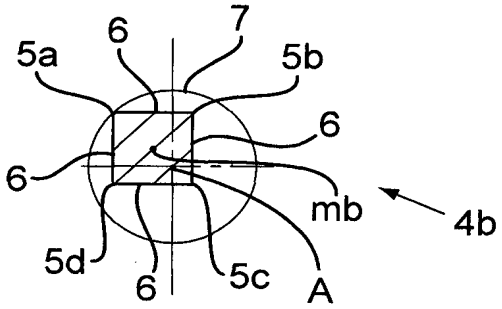

Fig.4

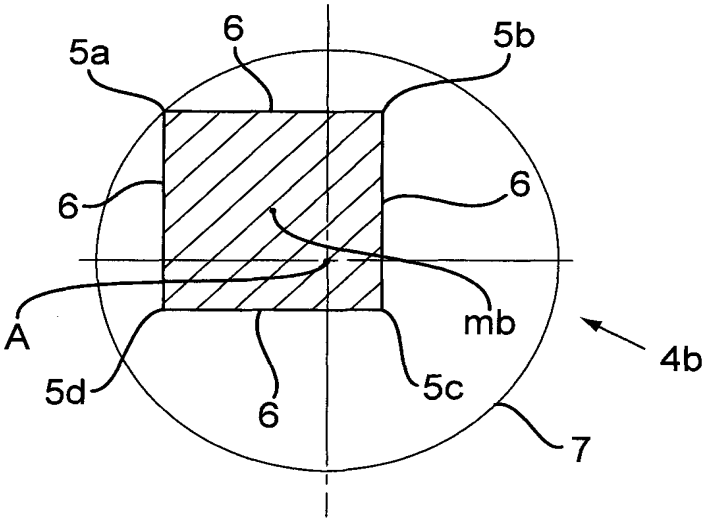

Fig.5

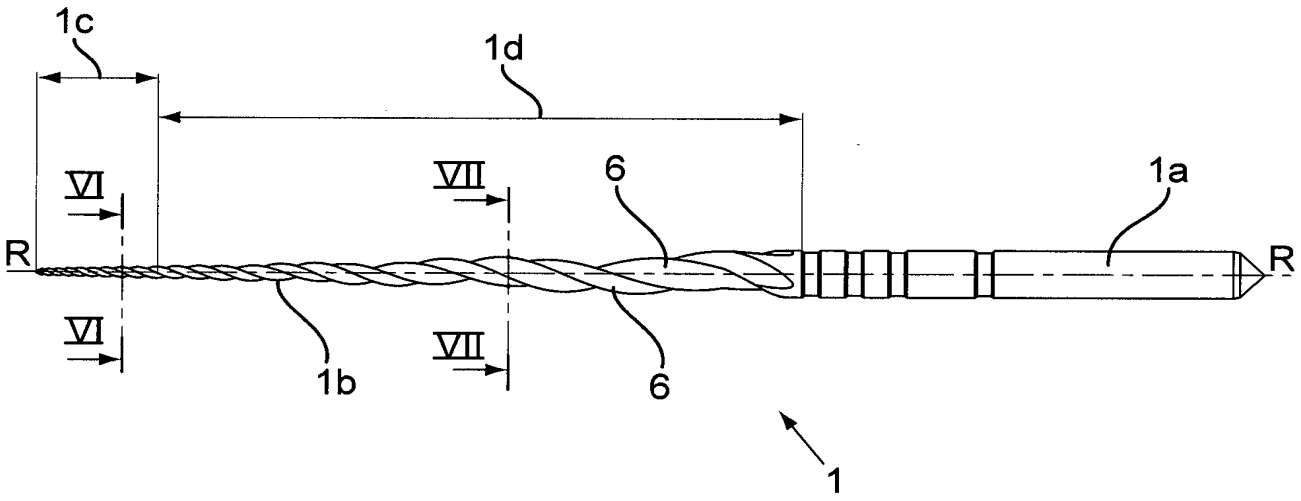

Fig.6

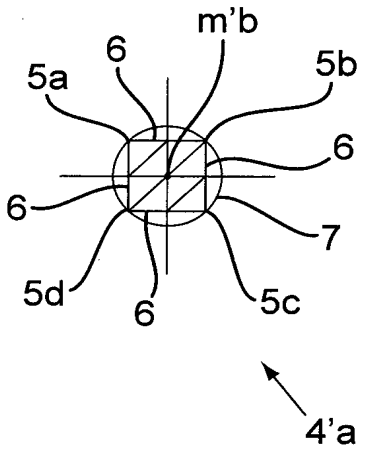

Fig.7

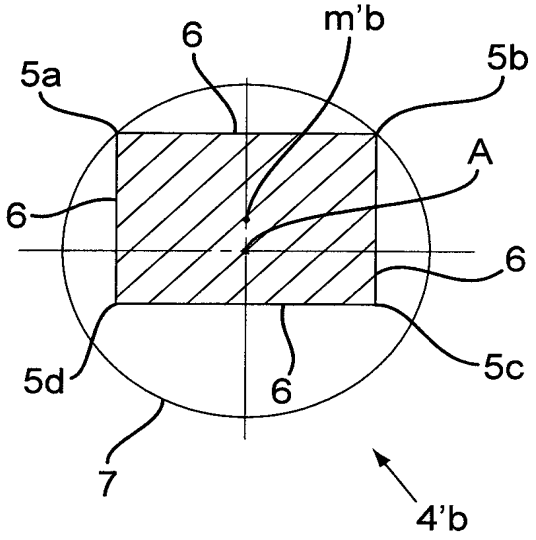

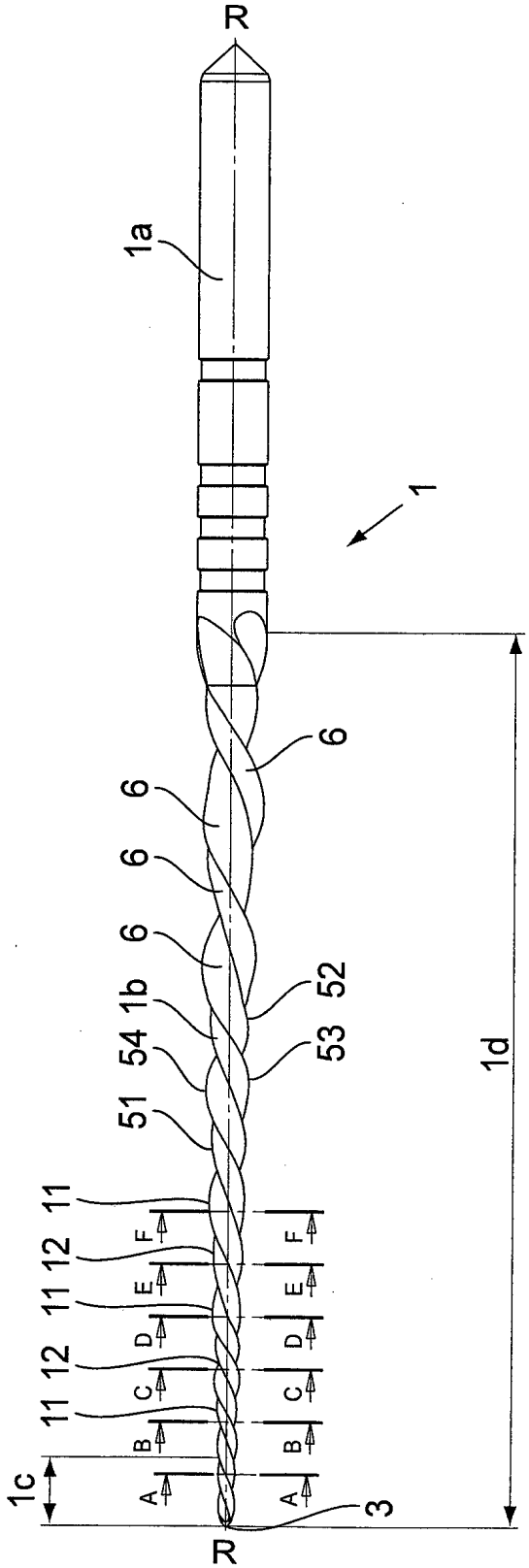

Fig.8

Fig.9

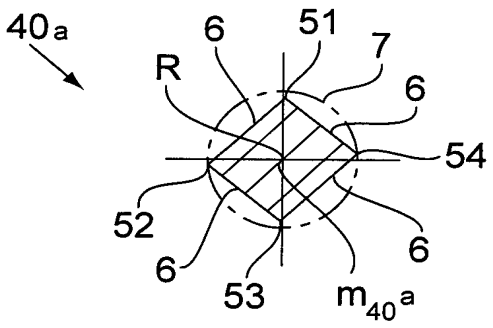

Fig.10

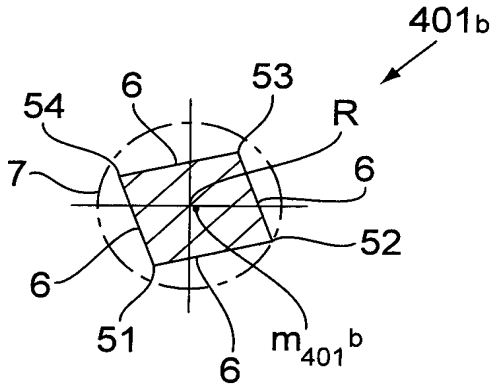

Fig.11

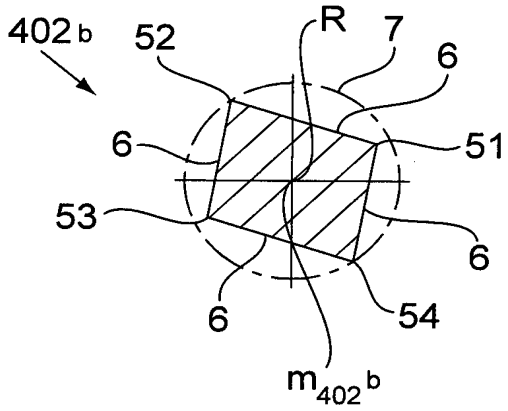

Fig.12

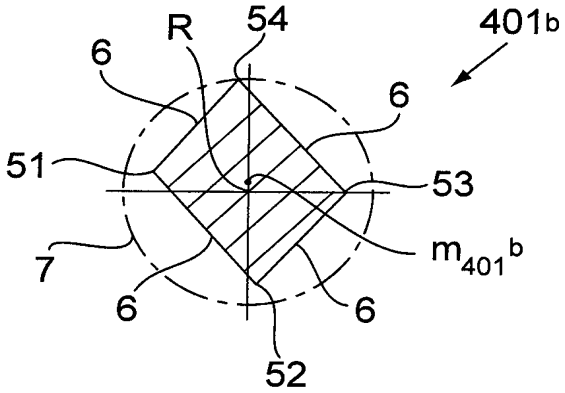

Fig.13

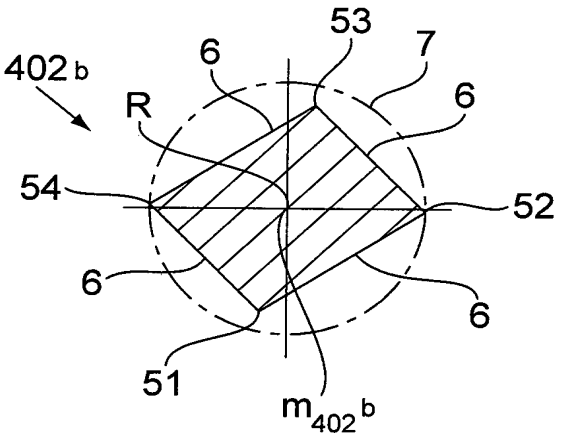

Fig.14

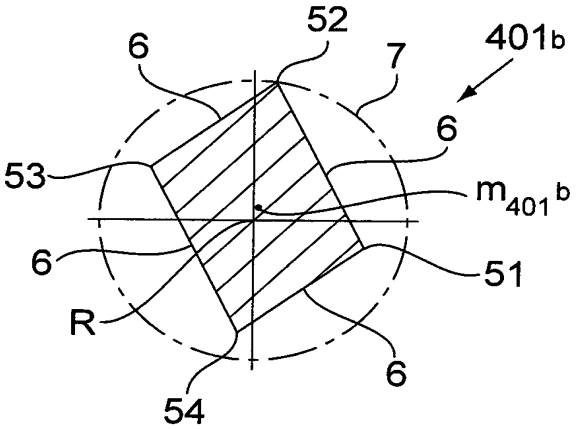

INTERNATIONAL SEARCH REPORT

International application No
PCT/IB2013/001191

A. CLASSIFICATION OF SUBJECT MATTER
INV. A61C5/02
ADD.

According to International Patent Classification (IPC) or to both national classification and IPC

B. FIELDS SEARCHED

Minimum documentation searched (classification system followed by classification symbols)
A61C

Documentation searched other than minimum documentation to the extent that such documents are included in the fields searched

Electronic data base consulted during the international search (name of data base and, where practicable, search terms used)

EPO-Internal, WPI Data

C. DOCUMENTS CONSIDERED TO BE RELEVANT

Category*	Citation of document, with indication, where appropriate, of the relevant passages	Relevant to claim No.
X	US 2006/265858 A1 (MCSPADDEN JOHN T [US]) 30 November 2006 (2006-11-30) paragraph [0037] paragraph [0043] paragraph [0044] figure 3G	1-9

A	US 2005/100859 A1 (GRAYBILL LONNIE M [US] ET AL) 12 May 2005 (2005-05-12) paragraph [0045] figures 1-4,10-14	1-9

A	DE 10 2006 007316 A1 (VDW GMBH [DE]) 30 August 2007 (2007-08-30) figures 3A-3E	1-9

	-/--	

[X] Further documents are listed in the continuation of Box C.

[X] See patent family annex.

* Special categories of cited documents :

"A" document defining the general state of the art which is not considered to be of particular relevance

"E" earlier application or patent but published on or after the international filing date

"L" document which may throw doubts on priority claim(s) or which is cited to establish the publication date of another citation or other special reason (as specified)

"O" document referring to an oral disclosure, use, exhibition or other means

"P" document published prior to the international filing date but later than the priority date claimed

"T" later document published after the international filing date or priority date and not in conflict with the application but cited to understand the principle or theory underlying the invention

"X" document of particular relevance; the claimed invention cannot be considered novel or cannot be considered to involve an inventive step when the document is taken alone

"Y" document of particular relevance; the claimed invention cannot be considered to involve an inventive step when the document is combined with one or more other such documents, such combination being obvious to a person skilled in the art

"&" document member of the same patent family

Date of the actual completion of the international search	Date of mailing of the international search report
6 September 2013	13/09/2013

Name and mailing address of the ISA/	Authorized officer
European Patent Office, P.B. 5818 Patentlaan 2 NL - 2280 HV Rijswijk Tel. (+31-70) 340-2040, Fax: (+31-70) 340-3016	Fortune, Bruce

INTERNATIONAL SEARCH REPORT

International application No
PCT/IB2013/001191

C(Continuation). DOCUMENTS CONSIDERED TO BE RELEVANT

Category*	Citation of document, with indication, where appropriate, of the relevant passages	Relevant to claim No.
A	US 2005/282109 A1 (HAGEMANN FRANK [DE]) 22 December 2005 (2005-12-22) paragraph [0001] paragraph [0037] - paragraph [0043] figures 2-5 -----	1-9

INTERNATIONAL SEARCH REPORT

Information on patent family members

International application No
PCT/IB2013/001191

Patent document cited in search report	Publication date	Patent family member(s)	Publication date
US 2006265858 A1	30-11-2006	NONE	
US 2005100859 A1	12-05-2005	US 2005100859 A1	12-05-2005
		WO 2006044545 A2	27-04-2006
DE 102006007316 A1	30-08-2007	NONE	
US 2005282109 A1	22-12-2005	AT 417566 T	15-01-2009
		DE 202004007925 U1	19-08-2004
		EP 1598027 A1	23-11-2005
		US 2005282109 A1	22-12-2005

RAPPORT DE RECHERCHE INTERNATIONALE

Demande internationale n°
PCT/IB2013/001191

A. CLASSEMENT DE L'OBJET DE LA DEMANDE

INV. A61C5/02
ADD.

Selon la classification internationale des brevets (CIB) ou à la fois selon la classification nationale et la CIB

B. DOMAINES SUR LESQUELS LA RECHERCHE A PORTE

Documentation minimale consultée (système de classification suivi des symboles de classement)

A61C

Documentation consultée autre que la documentation minimale dans la mesure où ces documents relèvent des domaines sur lesquels a porté la recherche

Base de données électronique consultée au cours de la recherche internationale (nom de la base de données, et si cela est réalisable, termes de recherche utilisés)

EPO-Internal, WPI Data

C. DOCUMENTS CONSIDERES COMME PERTINENTS

Catégorie*	Identification des documents cités, avec, le cas échéant, l'indication des passages pertinents	no. des revendications visées
X	US 2006/265858 A1 (MCSPADDEN JOHN T [US]) 30 novembre 2006 (2006-11-30) alinéa [0037] alinéa [0043] alinéa [0044] figure 3G	1-9

A	US 2005/100859 A1 (GRAYBILL LONNIE M [US] ET AL) 12 mai 2005 (2005-05-12) alinéa [0045] figures 1-4,10-14	1-9

A	DE 10 2006 007316 A1 (VDW GMBH [DE]) 30 août 2007 (2007-08-30) figures 3A-3E	1-9

	-/--	

[X] Voir la suite du cadre C pour la fin de la liste des documents

[X] Les documents de familles de brevets sont indiqués en annexe

* Catégories spéciales de documents cités:

"A" document définissant l'état général de la technique, non considéré comme particulièrement pertinent

"E" document antérieur, mais publié à la date de dépôt international ou après cette date

"L" document pouvant jeter un doute sur une revendication de priorité ou cité pour déterminer la date de publication d'une autre citation ou pour une raison spéciale (telle qu'indiquée)

"O" document se référant à une divulgation orale, à un usage, à une exposition ou tous autres moyens

"P" document publié avant la date de dépôt international, mais postérieurement à la date de priorité revendiquée

"T" document ultérieur publié après la date de dépôt international ou la date de priorité et n'appartenenant pas à l'état de la technique pertinent, mais cité pour comprendre le principe ou la théorie constituant la base de l'invention

"X" document particulièrement pertinent; l'invention revendiquée ne peut être considérée comme nouvelle ou comme impliquant une activité inventive par rapport au document considéré isolément

"Y" document particulièrement pertinent; l'invention revendiquée ne peut être considérée comme impliquant une activité inventive lorsque le document est associé à un ou plusieurs autres documents de même nature, cette combinaison étant évidente pour une personne du métier

"&" document qui fait partie de la même famille de brevets

Date à laquelle la recherche internationale a été effectivement achevée	Date d'expédition du présent rapport de recherche internationale
6 septembre 2013	13/09/2013

Nom et adresse postale de l'administration chargée de la recherche internationale	Fonctionnaire autorisé
Office Européen des Brevets, P.B. 5818 Patentlaan 2 NL - 2280 HV Rijswijk Tel. (+31-70) 340-2040, Fax: (+31-70) 340-3016	Fortune, Bruce

RAPPORT DE RECHERCHE INTERNATIONALE

Demande internationale n°
PCT/IB2013/001191

C(suite). DOCUMENTS CONSIDERES COMME PERTINENTS

Catégorie*	Identification des documents cités, avec, le cas échéant, l'indication des passages pertinents	no. des revendications visées
A	US 2005/282109 A1 (HAGEMANN FRANK [DE]) 22 décembre 2005 (2005-12-22) alinéa [0001] alinéa [0037] - alinéa [0043] figures 2-5 -----	1-9

RAPPORT DE RECHERCHE INTERNATIONALE

Renseignements relatifs aux membres de familles de brevets

Demande internationale n°
PCT/IB2013/001191

Document brevet cité au rapport de recherche	Date de publication	Membre(s) de la famille de brevet(s)	Date de publication
US 2006265858 A1	30-11-2006	AUCUN	
US 2005100859 A1	12-05-2005	US 2005100859 A1	12-05-2005
		WO 2006044545 A2	27-04-2006
DE 102006007316 A1	30-08-2007	AUCUN	
US 2005282109 A1	22-12-2005	AT 417566 T	15-01-2009
		DE 202004007925 U1	19-08-2004
		EP 1598027 A1	23-11-2005
		US 2005282109 A1	22-12-2005

(12) DEMANDE INTERNATIONALE PUBLIÉE EN VERTU DU TRAITÉ DE COOPÉRATION EN MATIÈRE DE BREVETS (PCT)

VERSION CORRIGÉE

(19) Organisation Mondiale de la Propriété Intellectuelle
Bureau international

(43) Date de la publication internationale
7 août 2014 (07.08.2014)

WIPO | PCT

(10) Numéro de publication internationale
WO 2014/118591 A8

(51) Classification internationale des brevets : *A61C 5/02* (2006.01)

(21) Numéro de la demande internationale : PCT/IB2013/001191

(22) Date de dépôt international : 7 juin 2013 (07.06.2013)

(25) Langue de dépôt : français

(26) Langue de publication : français

(30) Données relatives à la priorité : PCT/IB2013/000108 30 janvier 2013 (30.01.2013) IB

(71) Déposant : **MAILLEFER INSTRUMENTS HOLDING SARL** [CH/CH]; Chemin du Verger 3, CH-1338 Ballaigues (CH).

(72) Inventeurs : **ROTA, Gilbert**; 8 rue Pré Jean, F-25160 Vaux et Chantegrue (FR). **VALLOTTON, Paul-Henri**; Rue du Melley 22 C, CH-1142 Pampigny (CH).

(74) Mandataire : **MICHELI & CIE SA**; 122, rue de Genève, C.P. 61, CH-1226 Thônex (CH).

(81) États désignés *(sauf indication contraire, pour tout titre de protection nationale disponible)* : AE, AG, AL, AM, AO, AT, AU, AZ, BA, BB, BG, BH, BN, BR, BW, BY, BZ, CA, CH, CL, CN, CO, CR, CU, CZ, DE, DK, DM, DO, DZ, EC, EE, EG, ES, FI, GB, GD, GE, GH, GM, GT, HN, HR, HU, ID, IL, IN, IS, JP, KE, KG, KN, KP, KR, KZ, LA, LC, LK, LR, LS, LT, LU, LY, MA, MD, ME, MG, MK, MN, MW, MX, MY, MZ, NA, NG, NI, NO, NZ, OM, PA, PE, PG, PH, PL, PT, QA, RO, RS, RU, RW, SC, SD, SE, SG, SK, SL, SM, ST, SV, SY, TH, TJ, TM, TN, TR, TT, TZ, UA, UG, US, UZ, VC, VN, ZA, ZM, ZW.

(84) États désignés *(sauf indication contraire, pour tout titre de protection régionale disponible)* : ARIPO (BW, GH, GM, KE, LR, LS, MW, MZ, NA, RW, SD, SL, SZ, TZ, UG, ZM, ZW), eurasien (AM, AZ, BY, KG, KZ, RU, TJ, TM), européen (AL, AT, BE, BG, CH, CY, CZ, DE, DK, EE, ES, FI, FR, GB, GR, HR, HU, IE, IS, IT, LT, LU, LV, MC, MK, MT, NL, NO, PL, PT, RO, RS, SE, SI, SK, SM, TR), OAPI (BF, BJ, CF, CG, CI, CM, GA, GN, GQ, GW, KM, ML, MR, NE, SN, TD, TG).

Publiée :

— *avec rapport de recherche internationale (Art. 21(3))*

(48) Date de publication de la présente version corrigée : 16 octobre 2014

(15) Renseignements relatifs à la correction : voir la Notice du 16 octobre 2014

(54) Title : INSTRUMENT FOR BORING DENTAL ROOT CANALS

(54) Titre : INSTRUMENT POUR L'ALESAGE DES CANAUX RADICULAIRES DENTAIRES

Fig.1

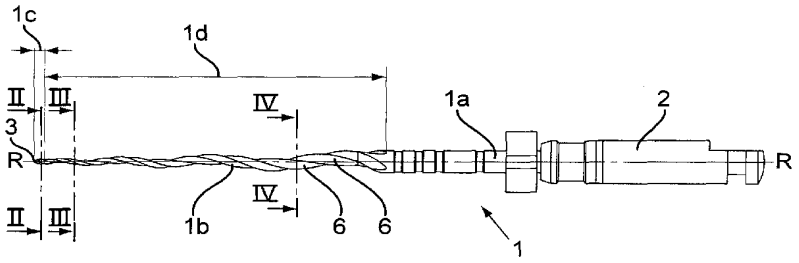

(57) Abstract : The invention relates to an instrument for boring dental root canals, comprising a thin rod (1) having, at least over part of the length thereof, a polygonal section (4) forming at least two cutting edges (5a, 5b) ending in a tip (3). Said length of the instrument has a first portion (1c) extending from the tip (3) and a second portion (1d) following on from the first portion (1c). At least one section (4a) of the first portion (1c) has a centre of mass (ma) located on the rotational axis. Every section (4b) of the second portion (1d) has a centre of mass (mb) that is offset in relation to the rotational axis and at least one cutting edge (5a) defined by said section (4b) is set back.

(57) Abrégé : Instrument pour l'alésage des canaux radiculaires dentaires comprenant une tige effilée (1) présentant sur au moins une partie de sa longueur, une section polygonale (4) formant au moins deux arêtes de coupe (5a, 5b) se terminant par une pointe (3). Ladite longueur de l'instrument comporte une première portion (1c) s'étendant depuis la pointe (3) et une seconde portion (1d) s'étendant à la suite de la première portion (1c). Au moins une section (4a) de la première portion (1c) présente un centre de masse (ma) situé sur l'axe de rotation. Toute section (4b) de la seconde portion (1d) présente un centre de masse (mb) décalé par rapport à l'axe de rotation et au moins une arête de coupe (5a) définie par ladite section (4b) est située en retrait.

WO 2014/118591 A8

TRANSMITTAL LETTER TO THE UNITED STATES DESIGNATED/ELECTED OFFICE (DO/EO/US) CONCERNING A FILING UNDER 35 U.S.C. 371		Attorney Docket No. **5001-1489** U.S. Application No.
INTERNATIONAL APPLN. NO. **PCT/IB2013/001191**	INTERNATIONAL FILING DATE **June 7, 2013**	PRIORITY DATE CLAIMED **January 30, 2013**

TITLE OF INVENTION: **INSTRUMENT FOR DRILLING DENTAL ROOT CANALS**

APPLICANT(S) FOR DO/EO/US: **1) Gilbert ROTA 2) Paul-Henri VALLOTTON**

Applicant herewith submits to the United States Designated Elected Office (DO/EO/US) the following items and other information:

1. ☒ This is a **FIRST** submission of items concerning a filing under 35 U.S.C. 371.
2. ☐ This is a **SECOND** or **SUBSEQUENT** submission of items concerning a filing under 35 U.S.C. 371.
3. ☒ This is an express request to begin national examination procedures (35 U.S.C. 371(f)).
4. ☒ The US has been elected (Article 31).
5. ☒ A copy of the International Application as filed (35 U.S.C. 371 (c)(2))
   a. ☐ is attached hereto (required only if not communicated by the International Bureau).
   b. ☒ has been communicated by the International Bureau. See attached PCT/IB/308 (Second Notice).
   c. ☐ is not required, as the application was filed in the United States Receiving Office (RO/US)
6. ☒ An English language translation of the International Application as filed (35 U.S.C. 371 (c)(2))
   a. ☒ is attached hereto.
   b. ☐ has been previously submitted under 35 U.S.C. 154(d)(4).
7. ☐ An oath or declaration of the inventor(s) (35 U.S.C. 371(c)(4)).
8. ☐ A Declaration of Inventorship for purposes of U.S.A. designation pursuant to rule 4.17(iv).
9. ☐ **Applicant claims small entity status. See 37 CFR 1.27.**
10. ☒ Information Disclosure Statement (IDS) w/PTO-1449 - ☒ Copy of IDS citations. - ☒ PCT/ISA/210 International Search Report included.
11. ☐ Assignment Papers filed via EFS.
12. ☒ A preliminary amendment.
13. ☒ An Application Data Sheet under 37 C.F.R. 1.76.
14. ☒ Abstract.
15. ☐ A substitute specification.
16. ☐ A computer-readable form of the sequence listing in accordance with PCT Rule 13*ter*.2 and 37 CFR 1.821 - 1.825.
17. ☒ Other items or information: **International Publication No. WO 2014/118591 (cover page only)**
18. ☒ The required filing fees are being paid online simultaneously herewith by credit card.
19. ☒ The Director is hereby authorized in this, concurrent, and future submissions, to charge payment or credit any overpayment to Deposit Account No. 25-0120 for any additional fee required under 37 C.F.R. §§ 1.16, 1.17, or 1.492.

SEND ALL CORRESPONDENCE TO:
YOUNG & THOMPSON
209 Madison Street
Suite 500
Alexandria, VA 22314
Telephone: (703) 521-2297
Facsimile: (703) 685-0573

Young &Thompson's Customer No. **00466**

BC/nmb

/Benoît Castel/
Signature

Benoit Castel, Reg. No. 35,041
Name, Registration Number

12 June 2015
Date

INSTRUMENT FOR DRILLING DENTAL ROOT CANALS

The object of the present invention is an instrument for drilling dental root canals.

The treatment of an infected dental root is carried out by extracting the pulp using special instruments, then by shaping the root canal using successive drilling procedures, traditionally carried out with instruments of varying size and conicity. The final operation consists of filling the root canal.

The shaping of the root canal consists initially of enlarging the canal in its crown and medial parts to permit, as a second step, easier treatment of the apical part of the canal by mechanical cleaning the infected tissues.

An instrument designed for drilling dental root canals generally has a tapered rod fitted into a handle to permit it to be driven manually or mechanically and comprising, on at least part of its length, helicoidal flutes with a constant or non-constant pitch, and having at least one cutting edge.

Used in continuous rotation, this type of instrument may have a tendency to screw itself into the canal. Apart from the screwing action, another problem occurring in the production of instruments for drilling root canals is that of the strength and flexibility of the instruments. Indeed, when the instrument is too flexible it may bend or break before the practitioner has been able to complete the operation and when the instrument is too rigid, it follows the curvature of the dental root canal only with difficulty.

Numerous instruments have been developed in response to these problems. Document EP 1 361 831 describes an instrument for drilling dental canals comprising a base, a cutting section and a guiding section, the cutting section being defined by an envelope of a cylindrical or conical shape, the longitudinal axis of which coincides with the axis of rotation of the instrument. The cutting section has clearance zones disposed set-back with respect to the envelope, alternating with drilling zones disposed on said envelope.

This alternating arrangement of zones on the envelope and set back from the envelope makes it possible to reduce the risk of screwing the instrument into the dental canal. Furthermore, the axis of the cutting section can be offset with respect to the axis of the envelope. This makes it possible to deepen the clearance zones and to make the evacuation of the debris during treatment more effective.

Document US 7 955 078 describes an endodontic instrument for preparation of dental root canals comprising a body shaped to turn about an axis of rotation. The body has a centre of mass which is not located on the axis of rotation of the instrument, thus giving the impression that the instrument is undulating ("swaggering") when it is rotated. An instrument such as this has greater flexibility and thus makes it possible to follow the complex curves of a dental root canal most effectively.

However, in these two documents the axis of the active part is offset with respect to the axis of rotation of the instrument over the whole length of said active part and in particular the axis of the point of the instrument is offset. This can generate a beating motion of the point within the canal. It thus becomes difficult to ensure optimum dimensioning of the canal during treatment, in particular in its apical portion. Moreover, a point with its axis offset also has the disadvantage of pushing the debris back towards the apical portion rather than evacuating it towards the top of the canal.

The aim of the present invention is to produce an instrument for drilling dental root canals which obviates the stated disadvantages. In particular, one aim of the present invention is thus to produce an instrument which is flexible while being strong, reliable and effective and which makes it possible at the same time to respect the initial path of the root canal to be treated and to ensure optimum dimensioning of the canal in its apical portion after treatment.

The object of the present invention is an instrument for drilling dental root canals as claimed in claim 1.

The drawings schematically illustrate by way of example a plurality of embodiments of the instrument in accordance with the invention.

Figure 1 illustrates a first embodiment of an instrument for drilling dental root canals in accordance with the invention.

Figure 2 is a cross-sectional view at the line II-II of the instrument shown in figure 1.

Figure 3 is a cross-sectional view at the line III-III of the instrument shown in figure 1.

Figure 4 is a cross-sectional view at the line IV-IV of the instrument shown in figure 1.

Figure 5 illustrates a second embodiment of an instrument for drilling dental root canals in accordance with the invention.

Figure 6 is a cross-sectional view at the line VI-VI of the instrument shown in figure 5.

Figure 7 is a cross-sectional view at the line VII-VII of the instrument shown in figure 5.

Figure 8 illustrates a third embodiment of an instrument for drilling dental root canals in accordance with the invention.

Figure 9 is a cross-sectional view at the line A-A of the instrument shown in figure 8.

Figure 10 is a cross-sectional view at the line B-B of the instrument shown in figure 8.

Figure 11 is a cross-sectional view at the line C-C of the instrument shown in figure 8.

Figure 12 is a cross-sectional view at the line D-D of the instrument shown in figure 8.

Figure 13 is a cross-sectional view at the line E-E of the instrument shown in figure 8.

Figure 14 is a cross-sectional view at the line F-F of the instrument shown in figure 8.

In a first embodiment shown in figure 1 the instrument in accordance with the invention comprises a rod 1 fitted at one of its ends 1a in a handle 2 permitting either manual actuation of the instrument or preferably its engagement in a hand-held part providing mechanical driving of the said instrument. In particular, the instrument 1 is intended to be driven in rotation about its axis of rotation R.

The rod 1 has an active part 1b extending to the other end 3 - the point 3 - of the rod 1. Said active part 1b is preferably tapered and conical, narrowing to the point 3 of the rod 1. Alternatively, the active part 1b or the whole rod 1 could be cylindrical rather than conical.

The active part 1b has a polygonal cross-section (the sides of which are straight or curved) and comprises cutting edges. More particularly in this first embodiment, the active part 1b has, over its whole length, a square cross-section 4 forming four cutting edges 5a, 5b, 5c, 5d defining between them four helicoidal flutes 6, one flute being the face defined between two successive cutting edges of the active part 1b. The active part 1b is defined by an envelope 7 which is substantially tapered and has its longitudinal axis coinciding with the axis of rotation R of the instrument.

The particular feature of the instrument in accordance with the invention resides in the fact that the active part 1b has a first portion 1c extending from the point 3 towards the rear of the active part 1b and of which the centre of mass is located on the axis of rotation R of the instrument and a second portion 1d extending from the end of the first portion 1c to the rear of the active part 1b and of which at least one cross-section has a centre of mass which is not located on the axis of rotation R of the instrument but is offset with respect to said axis R. In the first embodiment shown in figures 1 to 4, any cross-section of the second portion 1d of the active part 1b of the instrument 1 has a centre of mass which is not located on the axis of rotation R but is offset with respect to

said axis.

More precisely, and as shown in figure 2, in accordance with the invention any cross-section 4a of the first portion 1c has its centre of mass ma on the axis of rotation R of the instrument. Moreover, in this first embodiment the four edges 5a, 5b, 5c, 5d of such a cross-section 4a are located on the envelope 7. Thus the first portion 1c and in particular the point 3 are centred with respect to the axis of rotation R of the instrument or in other words the longitudinal axis of the first portion 1c coincides with said axis of rotation R.

As shown in figures 3 and 4, in the first embodiment, any cross-section 4b of the second portion 1d of the active part 1b has its centre of mass mb offset with respect to the axis of rotation R of the instrument and preferably a single cutting edge 5a of such a cross-section 4b is located on the envelope 7, the other cutting edges 5b, 5c and 5d being disposed inside said envelope 7. Thus in the first embodiment the whole of the second portion 1d of the active part 1b is off-centre with respect to the axis of rotation R of the instrument.

Thus an effective instrument is obtained because its point 3 is centred, does not generate any beating within the canal and has four active cutting edges.

Such an instrument in accordance with the invention can be obtained from a rod with a circular cross-section, preferably made from a nickel-titanium alloy, by providing therein helicoidal flutes by machining (milling), these flutes defining cutting edges such that the cross-section of the rod 1 is polygonal over the whole length of its active part 1b. In order to achieve the particular geometry of the active part 1b in accordance with the invention, the flutes 6 of the second portion 1d of the active part 1b are overcut with respect to the flutes 6 of the first portion 1c in order to obtain at least one cross-section 4b of said second portion 1d of which at least one cutting edge is set back within the envelope 7 and of which the centre of mass mb is offset with respect to the axis of rotation R. Thus on the second portion 1d of the active part 1b material is removed

from the instrument in accordance with the invention, which makes it more flexible on this second portion than a traditional instrument which would have, over its whole active part, a cross-section with its centre of mass centred on the axis of rotation and all its edges inscribed on the envelope. By virtue of the present invention, an instrument is obtained which is effective at its point 3 while being flexible.

Preferably, in the first embodiment, the second portion 1d has a progressive offset with respect to the axis of rotation R in the direction of the rear of the instrument: i.e. a cross-section of the second portion 1d close to the point has its centre of mass less offset proportionally to the surface of the cross-section with respect to said axis of rotation R than a cross-section of the second portion 1d closer to the rear of the instrument. In terms of machining the instrument, this produces flutes 6 which are overcut proportionally more and more along the second portion 1d of the active part 1b with respect to the flutes of the first portion 1c. Thus in this first embodiment the flexibility of the instrument is adjustable and in particular increases progressively towards the rear of the active part 1b.

Preferably, the first portion 1c of the active part extends over a length of 3 millimetres starting from the point 3 of the active part 1b. In a still more preferred manner, said first portion 1c has a length of 1 millimetre.

Figures 5 to 7 show a second embodiment of an instrument in accordance with the invention in which the active part 1b has, over its whole length, a rectangular cross-section 4' forming four cutting edges 5a, 5b, 5c, 5d defining four helicoidal flutes 6, one flute being the face defined between two successive cutting edges of the active part 1b. As in the first embodiment, the active part 1b is defined by an envelope 7 which is substantially tapered and has the axis of rotation R of the instrument as its longitudinal axis.

The active part 1b also has a first portion 1c extending from the point 3 towards the rear of the active part 1b and having its centre of mass located on the axis of rotation R

of the instrument and a second portion 1d extending from the end of the first portion 1c to the rear of the active part 1b and of which at least one cross-section has a centre of mass offset with respect to the axis of rotation R of the instrument. Preferably, and as in the first embodiment, any cross-section of the second portion 1d of the instrument in accordance with the second embodiment has a centre of mass offset with respect to the axis of rotation R.

In this second embodiment, and as shown in figure 6, any cross-section 4'a of the first portion 1c is square and has its centre of mass m'a on the axis of rotation R of the instrument. Furthermore, the four edges 5a, 5b, 5c, 5d of such a cross-section 4'a are located on the envelope 7 of the instrument. As shown in figure 7, any cross-section 4'b of the second portion 1d of the active part 1b has its centre of mass m'b offset with respect to the axis of rotation R of the instrument. In contrast to the first embodiment, for each cross-section 4'b of the second portion 1d of the active part 1c of the instrument in accordance with the second embodiment, two cutting edges 5a and 5b are on the envelope 7, the two other cutting edges 5c and 5d being disposed inside said envelope 7.

The other considerations relating to the first embodiment remain valid for this second embodiment.

As shown in figures 6 and 7, the cross-sections 4'a and 4'b of the first and second portions 1c, 1d are not necessarily symmetrical, the cross-section 4'a preferably being square, while the cross-section 4'b may be rectangular.

Figures 8 to 14 show a third embodiment of an instrument in accordance with the invention, in which the active part 1b of the instrument has, over its whole length, a polygonal cross-section 40 of a parallelogram shape, forming four cutting edges 51, 52, 53, 54 defining four helicoidal flutes 6, one flute being the face defined between two successive cutting edges of the active part 1b. As in the previous embodiments, the active part 1b is defined by an envelope 7 which is substantially tapered and has the

axis of rotation R of the instrument as its longitudinal axis.

In accordance with the invention, the active part 1b has a first portion 1c extending from the point 3 towards the rear of the active part 1b and having its centre of mass located on the axis of rotation R of the instrument. In this third embodiment, and as shown in figure 9, any cross-section 40a of the first portion 1c is in the form of a parallelogram and has its centre of mass $m_{40}a$ on the axis of rotation R of the instrument. Moreover, in this embodiment, two diagonally opposed cutting edges 52, 54 of such a cross-section 40a are located on the envelope 7 of the instrument, while the other pair of diagonally opposed cutting edges 51, 53 is located set back within the envelope 7.

In accordance with the invention, the active part 1b also has a second portion 1d extending from the end of the first portion 1c to the rear of the active part 1b, of which at least one cross-section has a centre of mass which is not located on the axis of rotation R of the instrument but which is offset with respect to said axis R. In the third embodiment of the invention, and as shown in figures 8 and 10 to 14, the second portion 1d has an alternating arrangement of first zones - off-centre zones 11 - in which any cross-section 401b has a centre of mass $m_{401}b$ offset with respect to the axis of rotation R of the instrument and second zones - centred zones 12 - in which any cross-section 402b has a centre of mass $m_{402}b$ located on the axis of rotation R of the instrument. The zone of the second portion 1d directly adjacent to the first portion 1c of the active part 1b of the instrument is an off-centre zone 11 (see figure 8).

Figures 11 and 13 each show a cross-section 402b of a centred zone 12 located along the second portion 1d of the active part 1b of the instrument, while figures 10, 12 and 14 each show a cross-section 401b of an off-centre zone 11 located along said second portion 1d.

Preferably, and as shown in figures 11 and 13, for each cross-section 402b of a centred zone 12, two diagonally opposed cutting edges 52, 54 are located on the envelope 7 of the instrument, while the other pair of diagonally opposed cutting edges

51, 53 is located set back within the envelope 7.

In a similar, preferred manner, and as shown in figures 10, 12 and 14, for each cross-section 401b of an off-centre zone 11, a single cutting edge 52, 54 appertaining to the pair of diagonally opposed cutting edges 52, 54 located on the envelope along the first portion 1c of the active part 1b of the instrument is located on the envelope 7 of the instrument, while the other cutting edges are located set back within the envelope 7.

Thus, apart from the alternation between the centred and off-centre zones 12,11 on the second portion 1d of the active part 1b of the instrument, in this third embodiment, said second portion 1d also has an alternating arrangement between the cutting edges located on the envelope. The succession of the different zones on the second section 1d of the instrument in accordance with the third embodiment can be described as follows:

- The first zone of the second portion 1d immediately adjacent to the first portion 1c of the active part 1b of the instrument is an off-centre zone 11. For each cross-section 401b of this off-centre zone 11, only one of the two diagonally opposed cutting edges 52, 54 located on the envelope 7 for any cross-section 40a of the first portion 1c - the first cutting edge 52 - is located on the envelope 7 of the instrument, the second of these cutting edges 54 and the second pair of diagonally opposed cutting edges 51, 53 being set back within the envelope 7 (figure 10);
- The second zone is a centred zone 12. For each cross-section 402b of this centred zone 12, the first and second diagonally opposed cutting edges 52, 54 are again on the envelope 7 of the instrument, the second pair of diagonally opposed edges 51, 53 still being set back within the envelope 7 (figure 11);
- The third zone is again an off-centre zone 11. However, in this zone the second cutting edge 54 diagonally opposed to the first 52 and which was set back within the envelope on the first zone is now located on the envelope 7, while the first cutting edge 52 is then located within the envelope 7, the

second pair of diagonally opposed cutting edges 51, 53 still being set back within the envelope 7 (figure 12).

The following zone shown in figure 13 is similar to the first zone and the alternating arrangement thus extends along the second portion 1d of the active part 1b of the instrument.

Thus the instrument in accordance with the third embodiment has two cutting edges 52, 54 which are located on the envelope for any cross-section 40a of the first portion 1c of the active part 1b and for any cross-section 402b of the centred zones 12 of the second portion 1d of the active part 1b but of which at least one of the two is set back within the envelope 7 for any cross-section 401b of an off-centre zone 11 of the second portion 1d, two off-centre zones 11 separated by a centred zone 12 not having the same cutting edge on the envelope 7.

In variations, the second pair of diagonally opposed cutting edges 51, 53 could be located on the envelope 7 of the instrument for any cross-section of the active part 1b or for any cross-section of the first portion 1c or for any centred cross-section 12 of the second portion 1d. The second pair of diagonally opposed cutting edges 51, 53 could also follow the same alternating arrangement described above as the first pair of cutting edges 52, 54 along the second portion 1d of the active part 1b of the instrument.

The other considerations relating to the first two embodiments remain valid for this third embodiment.

In particular, the first portion 1c of the active part preferably extends over a length of 3 millimetres from the point 3 of the active part 1b. In a still more preferred manner, said first portion 1c has a length of 1 millimetre.

Thus as in the first two embodiments described above, the instrument in accordance with the third embodiment is effective since it has a point 3 which is centred and does

not generate beating in the canal and permits precise shaping of said canal. Said instrument is also flexible at the rear owing to the presence of the off-centre zones on the second portion 1d of its active part 1b. However, in contrast to the first two embodiments in which the whole of the second portion 1d is off-centre and thus may generate a beating motion at the rear of the instrument, the alternating arrangement of centred and off-centre zones as described in the third embodiment makes it possible to ensure that the instrument is flexible while avoiding beating by ensuring the shape of the envelope generated by the instrument in rotation. Thus the instrument in accordance with the third embodiment retains all the advantages described in relation to the first two embodiments while reducing the beating motion at the rear of the instrument, a motion which could reduce the precision and speed of treatment of the dental root canal.

The embodiments presented above describe polygonal cross-sections with straight sides. It is clear that said sides could be curved. Consequently, the term "polygonal" should be understood in its general sense meaning "which has a plurality of sides" and covering equally a geometric shape with straight or curved sides.

The instrument in accordance with the invention could obviously have other known features such as variable conicity. Similarly, the flutes can be oriented equally to the right or left or even have a variable pitch.

In a general manner, the active part of an instrument in accordance with the invention has, over is whole length, a polygonal cross-section forming at least two cutting edges. The active part is defined by an essentially conical or cylindrical envelope, the longitudinal axis of which coincides with the axis of rotation of the instrument. The active part comprises a first portion extending from the point of the instrument and which is such that any cross-section of this first portion has its centre of mass on the axis of the envelope and defines at least two cutting edges which are all located on said envelope. The active part also comprises a second portion extending following the first portion towards the rear of the active part and which is such that at least one cross-

section of this second portion has a centre of mass which is not located on the axis of the envelope but which is offset with respect to this axis and defines cutting edges, of which at least one is located on the envelope and at least one is located set back within said envelope.

The instrument in accordance with the invention thus has a point which is centred with respect to the axis of rotation of the instrument and a rear part, of which at least one cross-section is off-centre. The centred point makes it possible to follow the initial path of the root canal, to avoid any beating motion within said canal in the vicinity of the point and to ensure dimensioning in the preparation of the apical part of the canal. Moreover, the centred point avoids debris descending towards said apical part of the canal and contributes to successful evacuation thereof. This evacuation is further facilitated by the fact that at least one cross-section of the rear part is off-centre: the debris in fact has more space to be carried out of the canal and the off-centring of at least one cross-section of the rear part of the instrument creates a dynamic effect which lifts the debris out of the canal.

Moreover, an instrument in accordance with the present invention makes it possible to ensure strength in the part close to the point in order thus to reduce the risk of breaking the instrument in its most fragile portion. The flexibility of the instrument is not thereby reduced, since the second portion having at least one off-centre cross-section of the instrument makes the instrument flexible and this flexibility can even be progressive towards the rear of the instrument either by adjusting the off-centring of the second portion of the active part of the instrument as described in the case of the first and second embodiments or by alternating centred cross-section with off-centre cross-section along the second portion of the active part of the instrument as described in the third embodiment. Thus the instrument can be rendered sufficiently flexible to follow the complex contour of a dental root canal.

Finally, the active cutting edges of the point of the instrument, i.e. those which are located on the envelope, ensure a good level of efficacy of the instrument. At the rear,

the contact zones of the instrument are reduced since some of the edges are located set back within the envelope of the instrument, which makes it possible to reduce the screwing effect and superfluous forces on the rear part of the instrument.

Thus a high-performance instrument is produced having a good balance between efficacy, flexibility and resistance to breaking and to the screwing effect.

Claims

1 Instrument for drilling dental root canals comprising a tapered rod (1) having over at least a part of its length - the active part (1b) - a polygonal cross-section (4) forming at least two cutting edges (5a, 5b; 52, 54), said active part (1b) terminating by a point (3) and being defined by an envelope (7) of a cylindrical or conical shape, the longitudinal axis of which coincides with the axis of rotation (R) of the instrument, characterised in that said active part (1b) has a first portion (1c) extending from the point (3) and a second portion (1d) extending following the first portion (1c) towards the rear of the active part (1b); by the fact that any cross-section (4a; 4'a; 40a) of the first portion (1c) has a centre of mass (ma; m'a m_{40}a) located on the axis of rotation (R) and that said at least two cutting edges (5a, 5b; 52, 54) defined by said cross-section (4a; 4'a; 40a) are located on the envelope (7); and by the fact that at least one cross-section (4b; 4'b; 401b) of the second portion (1d) has a centre of mass (mb; m'b m_{401}b) offset with respect to the axis of rotation (R) and at least one cutting edge (5a; 52, 54) defined by said cross-section (4b; 4'b; 401b) is located set back within the envelope (7).

2 Instrument as claimed in claim 1, characterised in that any cross-section (4b; 4'b) of the second portion (1d) has a centre of mass (mb; m'b) offset with respect to the axis of rotation (R) and at least one cutting edge (5a) defined by said cross-section (4b; 4'b) is located set back within the envelope (7).

3 Instrument as claimed in claim 2, characterised in that exactly one cutting edge (5a) defined by any cross-section (4b) of the second portion (1d) of the active part (1b) is located on the envelope (7).

4 Instrument as claimed in any one of claims 2 or 3, characterised in that a cross-section (4b) of the second portion (1d) of the active part (1b) located close to the point (3) has a centre of mass (mb) proportionally closer to the axis of rotation (R) than the centre of mass of a cross-section of said second portion (1d) located at

the rear of the active part (1b).

5 Instrument as claimed in claim 1, characterised in that the second portion (1d) has an alternating arrangement of centred zones (12) in which any cross-section (402b) has a centre of mass (m_{402}b) on the axis of rotation (R) and said at least two cutting edges (52, 54) defined by said cross-section (402b) are located on the envelope (7) and off-centre zones (11) in which any cross-section (401b) has a centre of mass (m_{401}b) offset with respect to said axis of rotation (R) and at least one cutting edge (52, 54) defined by said cross-section (401b) is located set back within the envelope (7).

6 Instrument as claimed in claim 5, characterised in that the off-centre zones (11) alternate between first zones in which for any cross-section (401b) a first (52) of the at least two cutting edges (52, 54) defined by said cross-section is located set back within the envelope (7) while the second (54) of the at least two cutting edges is located on the envelope (7) and second zones in which for any cross-section, the second (54) of the at least two cutting edges (52) defined by said cross-section is located set back within the envelope (7) while the first (52) is located on the envelope (7).

7 Instrument as claimed in any one of the preceding claims, characterised in that the active part (1b) has over its whole length a polygonal cross-section with straight sides.

8 Instrument as claimed in any one of the preceding claims, characterised in that the first portion (1c) of the active part (1b) has a square cross-section and that the second portion (1d) of the active part has a rectangular cross-section.

9 Instrument as claimed in any one of the preceding claims, characterised in that the first portion (1c) of the active part (1b) has a length between 1 and 3 millimetres.

Abstract

The present invention relates to an instrument for drilling dental root canals comprising a tapered rod (1) having over at least a part of its length - the active part (1b) - a polygonal cross-section (4) forming at least two cutting edges (5a, 5b), said active part (1b) terminating by a point (3) and being defined by an envelope (7) of a cylindrical or conical shape, the longitudinal axis of which coincides with the axis of rotation (A) of the instrument. Said active part (1b) has a first portion (1c) extending from the point (3) and a second portion (1d) extending following the first portion (1c) towards the rear of the active part (1b). At least one cross-section (4a) of the first portion (1c) has a centre of mass (ma) located on the axis of rotation (A) and said cutting edges (5a, 5b) defined by said cross-section (4a) are located on the envelope (7). Any cross-section (4b) of the second portion (1d) has a centre of mass (mb) offset with respect to the axis of rotation (A) and at least one cutting edge (5a) defined by said cross-section (4b) is located set back within the envelope (7).

(Figure 1)

Application Data Sheet 37 CFR 1.76	Attorney Docket Number	5001-1489
	Application Number	
Title of Invention	INSTRUMENT FOR DRILLING DENTAL ROOT CANALS	

The application data sheet is part of the provisional or nonprovisional application for which it is being submitted. The following form contains the bibliographic data arranged in a format specified by the United States Patent and Trademark Office as outlined in 37 CFR 1.76.
This document may be completed electronically and submitted to the Office in electronic format using the Electronic Filing System (EFS) or the document may be printed and included in a paper filed application.

Secrecy Order 37 CFR 5.2

☐ Portions or all of the application associated with this Application Data Sheet may fall under a Secrecy Order pursuant to 37 CFR 5.2 (Paper filers only. Applications that fall under Secrecy Order may not be filed electronically.)

Inventor Information:

Inventor 1 Remove

Legal Name

Prefix	Given Name	Middle Name	Family Name	Suffix
	Gilbert		ROTA	

Residence Information (Select One) ○ US Residency ◉ Non US Residency ○ Active US Military Service

City	Vaux et Chantegrue	Country of Residence i	FR

Mailing Address of Inventor:

Address 1	8 rue Pre Jean		
Address 2			
City	Vaux et Chantegrue	**State/Province**	
Postal Code	F-25160	**Country** i	FR

Inventor 2 Remove

Legal Name

Prefix	Given Name	Middle Name	Family Name	Suffix
	Paul-Henri		VALLOTTON	

Residence Information (Select One) ○ US Residency ◉ Non US Residency ○ Active US Military Service

City	Pampigny	Country of Residence i	CH

Mailing Address of Inventor:

Address 1	Rue du Melley 22 C		
Address 2			
City	Pampigny	**State/Province**	
Postal Code	CH-1142	**Country** i	CH

All Inventors Must Be Listed - Additional Inventor Information blocks may be generated within this form by selecting the **Add** button. Add

Correspondence Information:

Application Data Sheet 37 CFR 1.76	Attorney Docket Number	5001-1489
	Application Number	
Title of Invention	INSTRUMENT FOR DRILLING DENTAL ROOT CANALS	

Enter either Customer Number or complete the Correspondence Information section below.
For further information see 37 CFR 1.33(a).

☐ **An Address is being provided for the correspondence Information of this application.**

Customer Number	00466		
Email Address	embon@young-thompson.com	Add Email	Remove Email

Application Information:

Title of the Invention	INSTRUMENT FOR DRILLING DENTAL ROOT CANALS		
Attorney Docket Number	5001-1489	**Small Entity Status Claimed**	☐
Application Type	Nonprovisional		
Subject Matter	Utility		
Total Number of Drawing Sheets (if any)	4	**Suggested Figure for Publication (if any)**	

Filing By Reference :

Only complete this section when filing an application by reference under 35 U.S.C. 111(c) and 37 CFR 1.57(a). Do not complete this section if application papers including a specification and any drawings are being filed. Any domestic benefit or foreign priority information must be provided in the appropriate section(s) below (i.e., "Domestic Benefit/National Stage Information" and "Foreign Priority Information").

For the purposes of a filing date under 37 CFR 1.53(b), the description and any drawings of the present application are replaced by this reference to the previously filed application, subject to conditions and requirements of 37 CFR 1.57(a).

Application number of the previously filed application	Filing date (YYYY-MM-DD)	Intellectual Property Authority or Country

Publication Information:

☐ Request Early Publication (Fee required at time of Request 37 CFR 1.219)

☐ **Request Not to Publish.** I hereby request that the attached application not be published under 35 U.S.C. 122(b) and certify that the invention disclosed in the attached application **has not and will not** be the subject of an application filed in another country, or under a multilateral international agreement, that requires publication at eighteen months after filing.

Representative Information:

Representative information should be provided for all practitioners having a power of attorney in the application. Providing this information in the Application Data Sheet does not constitute a power of attorney in the application (see 37 CFR 1.32).
Either enter Customer Number or complete the Representative Name section below. If both sections are completed the customer Number will be used for the Representative Information during processing.

Please Select One:	◉ Customer Number	○ US Patent Practitioner	○ Limited Recognition (37 CFR 11.9)
Customer Number	00466		

Application Data Sheet 37 CFR 1.76	Attorney Docket Number	5001-1489
	Application Number	
Title of Invention	INSTRUMENT FOR DRILLING DENTAL ROOT CANALS	

Domestic Benefit/National Stage Information:

This section allows for the applicant to either claim benefit under 35 U.S.C. 119(e), 120, 121, or 365(c) or indicate National Stage entry from a PCT application. Providing this information in the application data sheet constitutes the specific reference required by 35 U.S.C. 119(e) or 120, and 37 CFR 1.78.
When referring to the current application, please leave the application number blank.

Prior Application Status	Pending		Remove
Application Number	Continuity Type	Prior Application Number	Filing Date (YYYY-MM-DD)
	a 371 of international	PCT/IB2013/001191	2013-06-07

Additional Domestic Benefit/National Stage Data may be generated within this form by selecting the **Add** button. Add

Foreign Priority Information:

This section allows for the applicant to claim priority to a foreign application. Providing this information in the application data sheet constitutes the claim for priority as required by 35 U.S.C. 119(b) and 37 CFR 1.55(d). When priority is claimed to a foreign application that is eligible for retrieval under the priority document exchange program (PDX) [i]the information will be used by the Office to automatically attempt retrieval pursuant to 37 CFR 1.55(h)(1) and (2). Under the PDX program, applicant bears the ultimate responsibility for ensuring that a copy of the foreign application is received by the Office from the participating foreign intellectual property office, or a certified copy of the foreign priority application is filed, within the time period specified in 37 CFR 1.55(g)(1).

Remove

Application Number	Country [i]	Filing Date (YYYY-MM-DD)	Access Code[i] (if applicable)
PCT/IB2013/000108	IB	2013-01-30	

Additional Foreign Priority Data may be generated within this form by selecting the **Add** button. Add

Statement under 37 CFR 1.55 or 1.78 for AIA (First Inventor to File) Transition Applications

☐ This application (1) claims priority to or the benefit of an application filed before March 16, 2013 and (2) also contains, or contained at any time, a claim to a claimed invention that has an effective filing date on or after March 16, 2013.
NOTE: By providing this statement under 37 CFR 1.55 or 1.78, this application, with a filing date on or after March 16, 2013, will be examined under the first inventor to file provisions of the AIA.

Application Data Sheet 37 CFR 1.76	Attorney Docket Number	5001-1489
	Application Number	
Title of Invention	INSTRUMENT FOR DRILLING DENTAL ROOT CANALS	

Authorization to Permit Access:

☒ Authorization to Permit Access to the Instant Application by the Participating Offices

If checked, the undersigned hereby grants the USPTO authority to provide the European Patent Office (EPO), the Japan Patent Office (JPO), the Korean Intellectual Property Office (KIPO), the World Intellectual Property Office (WIPO), and any other intellectual property offices in which a foreign application claiming priority to the instant patent application is filed access to the instant patent application. See 37 CFR 1.14(c) and (h). This box should not be checked if the applicant does not wish the EPO, JPO, KIPO, WIPO, or other intellectual property office in which a foreign application claiming priority to the instant patent application is filed to have access to the instant patent application.

In accordance with 37 CFR 1.14(h)(3), access will be provided to a copy of the instant patent application with respect to: 1) the instant patent application-as-filed; 2) any foreign application to which the instant patent application claims priority under 35 U.S.C. 119(a)-(d) if a copy of the foreign application that satisfies the certified copy requirement of 37 CFR 1.55 has been filed in the instant patent application; and 3) any U.S. application-as-filed from which benefit is sought in the instant patent application.

In accordance with 37 CFR 1.14(c), access may be provided to information concerning the date of filing this Authorization.

Applicant Information:

Providing assignment information in this section does not substitute for compliance with any requirement of part 3 of Title 37 of CFR to have an assignment recorded by the Office.

Applicant 1 Remove

If the applicant is the inventor (or the remaining joint inventor or inventors under 37 CFR 1.45), this section should not be completed. The information to be provided in this section is the name and address of the legal representative who is the applicant under 37 CFR 1.43; or the name and address of the assignee, person to whom the inventor is under an obligation to assign the invention, or person who otherwise shows sufficient proprietary interest in the matter who is the applicant under 37 CFR 1.46. If the applicant is an applicant under 37 CFR 1.46 (assignee, person to whom the inventor is obligated to assign, or person who otherwise shows sufficient proprietary interest) together with one or more joint inventors, then the joint inventor or inventors who are also the applicant should be identified in this section.

Clear

◉ Assignee	○ Legal Representative under 35 U.S.C. 117	○ Joint Inventor
○ Person to whom the inventor is obligated to assign.	○ Person who shows sufficient proprietary interest	

If applicant is the legal representative, indicate the authority to file the patent application, the inventor is:

Name of the Deceased or Legally Incapacitated Inventor :

If the Applicant is an Organization check here. ☒

Organization Name	MAILLEFER INSTRUMENTS HOLDING SARL

Application Data Sheet 37 CFR 1.76	Attorney Docket Number	5001-1489
	Application Number	
Title of Invention	INSTRUMENT FOR DRILLING DENTAL ROOT CANALS	

Mailing Address Information:			
Address 1	Chemin du Verger 3		
Address 2			
City	Ballaigues	**State/Province**	
Country i	CH	Postal Code	CH-1338
Phone Number		Fax Number	
Email Address			

Additional Applicant Data may be generated within this form by selecting the Add button. Add

Assignee Information including Non-Applicant Assignee Information:

Providing assignment information in this section does not subsitute for compliance with any requirement of part 3 of Title 37 of CFR to have an assignment recorded by the Office.

Assignee 1

Complete this section if assignee information, including non-applicant assignee information, is desired to be included on the patent application publication . An assignee-applicant identified in the "Applicant Information" section will appear on the patent application publication as an applicant. For an assignee-applicant, complete this section only if identification as an assignee is also desired on the patent application publication.

Remove

If the Assignee or Non-Applicant Assignee is an Organization check here. ☐

Prefix	**Given Name**	Middle Name	**Family Name**	Suffix

Mailing Address Information For Assignee including Non-Applicant Assignee:			
Address 1			
Address 2			
City		**State/Province**	
Country i		Postal Code	
Phone Number		Fax Number	
Email Address			

Additional Assignee or Non-Applicant Assignee Data may be generated within this form by selecting the Add button. Add

Application Data Sheet 37 CFR 1.76	Attorney Docket Number	5001-1489
	Application Number	
Title of Invention	INSTRUMENT FOR DRILLING DENTAL ROOT CANALS	

Signature:

Remove

NOTE: This form must be signed in accordance with 37 CFR 1.33. See 37 CFR 1.4 for signature requirements and certifications					
Signature	/Benoit Castel/			Date (YYYY-MM-DD)	2015-06-12
First Name	Benoit	Last Name	Castel	Registration Number	35041
Additional Signature may be generated within this form by selecting the Add button.					Add

This collection of information is required by 37 CFR 1.76. The information is required to obtain or retain a benefit by the public which is to file (and by the USPTO to process) an application. Confidentiality is governed by 35 U.S.C. 122 and 37 CFR 1.14. This collection is estimated to take 23 minutes to complete, including gathering, preparing, and submitting the completed application data sheet form to the USPTO. Time will vary depending upon the individual case. Any comments on the amount of time you require to complete this form and/or suggestions for reducing this burden, should be sent to the Chief Information Officer, U.S. Patent and Trademark Office, U.S. Department of Commerce, P.O. Box 1450, Alexandria, VA 22313-1450. DO NOT SEND FEES OR COMPLETED FORMS TO THIS ADDRESS. **SEND TO: Commissioner for Patents, P.O. Box 1450, Alexandria, VA 22313-1450.**

Privacy Act Statement

The Privacy Act of 1974 (P.L. 93-579) requires that you be given certain information in connection with your submission of the attached form related to a patent application or patent. Accordingly, pursuant to the requirements of the Act, please be advised that: (1) the general authority for the collection of this information is 35 U.S.C. 2(b)(2); (2) furnishing of the information solicited is voluntary; and (3) the principal purpose for which the information is used by the U.S. Patent and Trademark Office is to process and/or examine your submission related to a patent application or patent. If you do not furnish the requested information, the U.S. Patent and Trademark Office may not be able to process and/or examine your submission, which may result in termination of proceedings or abandonment of the application or expiration of the patent.

The information provided by you in this form will be subject to the following routine uses:

1. The information on this form will be treated confidentially to the extent allowed under the Freedom of Information Act (5 U.S.C. 552) and the Privacy Act (5 U.S.C. 552a). Records from this system of records may be disclosed to the Department of Justice to determine whether the Freedom of Information Act requires disclosure of these records.

2. A record from this system of records may be disclosed, as a routine use, in the course of presenting evidence to a court, magistrate, or administrative tribunal, including disclosures to opposing counsel in the course of settlement negotiations.

3. A record in this system of records may be disclosed, as a routine use, to a Member of Congress submitting a request involving an individual, to whom the record pertains, when the individual has requested assistance from the Member with respect to the subject matter of the record.

4. A record in this system of records may be disclosed, as a routine use, to a contractor of the Agency having need for the information in order to perform a contract. Recipients of information shall be required to comply with the requirements of the Privacy Act of 1974, as amended, pursuant to 5 U.S.C. 552a(m).

5. A record related to an International Application filed under the Patent Cooperation Treaty in this system of records may be disclosed, as a routine use, to the International Bureau of the World Intellectual Property Organization, pursuant to the Patent Cooperation Treaty.

6. A record in this system of records may be disclosed, as a routine use, to another federal agency for purposes of National Security review (35 U.S.C. 181) and for review pursuant to the Atomic Energy Act (42 U.S.C. 218(c)).

7. A record from this system of records may be disclosed, as a routine use, to the Administrator, General Services, or his/her designee, during an inspection of records conducted by GSA as part of that agency's responsibility to recommend improvements in records management practices and programs, under authority of 44 U.S.C. 2904 and 2906. Such disclosure shall be made in accordance with the GSA regulations governing inspection of records for this purpose, and any other relevant (i.e., GSA or Commerce) directive. Such disclosure shall not be used to make determinations about individuals.

8. A record from this system of records may be disclosed, as a routine use, to the public after either publication of the application pursuant to 35 U.S.C. 122(b) or issuance of a patent pursuant to 35 U.S.C. 151. Further, a record may be disclosed, subject to the limitations of 37 CFR 1.14, as a routine use, to the public if the record was filed in an application which became abandoned or in which the proceedings were terminated and which application is referenced by either a published application, an application open to public inspections or an issued patent.

9. A record from this system of records may be disclosed, as a routine use, to a Federal, State, or local law enforcement agency, if the USPTO becomes aware of a violation or potential violation of law or regulation.

PTO/SB/08a (01-10)
Approved for use through 07/31/2012. OMB 0651-0031
U.S. Patent and Trademark Office; U.S. DEPARTMENT OF COMMERCE

INFORMATION DISCLOSURE STATEMENT BY APPLICANT

(Not for submission under 37 CFR 1.99)

Application Number	
Filing Date	2015-06-12
First Named Inventor	Gilbert ROTA
Art Unit	
Examiner Name	
Attorney Docket Number	5001-1489

U.S.PATENTS Remove

Examiner Initial*	Cite No	Patent Number	Kind Code[1]	Issue Date	Name of Patentee or Applicant of cited Document	Pages,Columns,Lines where Relevant Passages or Relevant Figures Appear
	1	7955078	B2	2011-06-07	Scianamblo	Cited in Specification

If you wish to add additional U.S. Patent citation information please click the Add button. Add

U.S.PATENT APPLICATION PUBLICATIONS Remove

Examiner Initial*	Cite No	Publication Number	Kind Code[1]	Publication Date	Name of Patentee or Applicant of cited Document	Pages,Columns,Lines where Relevant Passages or Relevant Figures Appear
	1	20060265858	A1	2006-11-30	McSpadden	Cited in ISR
	2	20050100859	A1	2005-05-12	Graybill et al.	Cited in ISR
	3	20050282109	A1	2005-12-22	Hagemann	Cited in ISR

If you wish to add additional U.S. Published Application citation information please click the Add button. Add

FOREIGN PATENT DOCUMENTS Remove

Examiner Initial*	Cite No	Foreign Document Number[3]	Country Code[2] ¡	Kind Code[4]	Publication Date	Name of Patentee or Applicant of cited Document	Pages,Columns,Lines where Relevant Passages or Relevant Figures Appear	T[5]
	1	102006007316	DE	A1	2007-08-30		Cited in ISR; English Language Abstract	☐

INFORMATION DISCLOSURE STATEMENT BY APPLICANT (Not for submission under 37 CFR 1.99)	Application Number	
	Filing Date	2015-06-12
	First Named Inventor	Gilbert ROTA
	Art Unit	
	Examiner Name	
	Attorney Docket Number	5001-1489

	2	1361831	EP	A1	2003-11-19		Cited in Specification; English Language Abstract	☐
If you wish to add additional Foreign Patent Document citation information please click the Add button Add								
NON-PATENT LITERATURE DOCUMENTS Remove								
Examiner Initials*	Cite No	Include name of the author (in CAPITAL LETTERS), title of the article (when appropriate), title of the item (book, magazine, journal, serial, symposium, catalog, etc), date, pages(s), volume-issue number(s), publisher, city and/or country where published.						T[5]
	1	International Search Report, dated September 13, 2013, from corresponding PCT application.						☐
If you wish to add additional non-patent literature document citation information please click the Add button Add								

EXAMINER SIGNATURE			
Examiner Signature		Date Considered	

*EXAMINER: Initial if reference considered, whether or not citation is in conformance with MPEP 609. Draw line through a citation if not in conformance and not considered. Include copy of this form with next communication to applicant.

[1] See Kind Codes of USPTO Patent Documents at www.USPTO.GOV or MPEP 901.04. [2] Enter office that issued the document, by the two-letter code (WIPO Standard ST.3). [3] For Japanese patent documents, the indication of the year of the reign of the Emperor must precede the serial number of the patent document. [4] Kind of document by the appropriate symbols as indicated on the document under WIPO Standard ST.16 if possible. [5] Applicant is to place a check mark here if English language translation is attached.

INFORMATION DISCLOSURE STATEMENT BY APPLICANT (Not for submission under 37 CFR 1.99)	Application Number	
	Filing Date	2015-06-12
	First Named Inventor	Gilbert ROTA
	Art Unit	
	Examiner Name	
	Attorney Docket Number	5001-1489

CERTIFICATION STATEMENT

Please see 37 CFR 1.97 and 1.98 to make the appropriate selection(s):

☐ That each item of information contained in the information disclosure statement was first cited in any communication from a foreign patent office in a counterpart foreign application not more than three months prior to the filing of the information disclosure statement. See 37 CFR 1.97(e)(1).

OR

☐ That no item of information contained in the information disclosure statement was cited in a communication from a foreign patent office in a counterpart foreign application, and, to the knowledge of the person signing the certification after making reasonable inquiry, no item of information contained in the information disclosure statement was known to any individual designated in 37 CFR 1.56(c) more than three months prior to the filing of the information disclosure statement. See 37 CFR 1.97(e)(2).

☐ See attached certification statement.

☐ The fee set forth in 37 CFR 1.17 (p) has been submitted herewith.

☒ A certification statement is not submitted herewith.

SIGNATURE

A signature of the applicant or representative is required in accordance with CFR 1.33, 10.18. Please see CFR 1.4(d) for the form of the signature.

Signature	/Benoit Castel/	Date (YYYY-MM-DD)	2015-06-12
Name/Print	Benoit Castel	Registration Number	35041

This collection of information is required by 37 CFR 1.97 and 1.98. The information is required to obtain or retain a benefit by the public which is to file (and by the USPTO to process) an application. Confidentiality is governed by 35 U.S.C. 122 and 37 CFR 1.14. This collection is estimated to take 1 hour to complete, including gathering, preparing and submitting the completed application form to the USPTO. Time will vary depending upon the individual case. Any comments on the amount of time you require to complete this form and/or suggestions for reducing this burden, should be sent to the Chief Information Officer, U.S. Patent and Trademark Office, U.S. Department of Commerce, P.O. Box 1450, Alexandria, VA 22313-1450. DO NOT SEND FEES OR COMPLETED FORMS TO THIS ADDRESS. **SEND TO: Commissioner for Patents, P.O. Box 1450, Alexandria, VA 22313-1450.**

Privacy Act Statement

The Privacy Act of 1974 (P.L. 93-579) requires that you be given certain information in connection with your submission of the attached form related to a patent application or patent. Accordingly, pursuant to the requirements of the Act, please be advised that: (1) the general authority for the collection of this information is 35 U.S.C. 2(b)(2); (2) furnishing of the information solicited is voluntary; and (3) the principal purpose for which the information is used by the U.S. Patent and Trademark Office is to process and/or examine your submission related to a patent application or patent. If you do not furnish the requested information, the U.S. Patent and Trademark Office may not be able to process and/or examine your submission, which may result in termination of proceedings or abandonment of the application or expiration of the patent.

The information provided by you in this form will be subject to the following routine uses:

1. The information on this form will be treated confidentially to the extent allowed under the Freedom of Information Act (5 U.S.C. 552) and the Privacy Act (5 U.S.C. 552a). Records from this system of records may be disclosed to the Department of Justice to determine whether the Freedom of Information Act requires disclosure of these record s.

2. A record from this system of records may be disclosed, as a routine use, in the course of presenting evidence to a court, magistrate, or administrative tribunal, including disclosures to opposing counsel in the course of settlement negotiations.

3. A record in this system of records may be disclosed, as a routine use, to a Member of Congress submitting a request involving an individual, to whom the record pertains, when the individual has requested assistance from the Member with respect to the subject matter of the record.

4. A record in this system of records may be disclosed, as a routine use, to a contractor of the Agency having need for the information in order to perform a contract. Recipients of information shall be required to comply with the requirements of the Privacy Act of 1974, as amended, pursuant to 5 U.S.C. 552a(m).

5. A record related to an International Application filed under the Patent Cooperation Treaty in this system of records may be disclosed, as a routine use, to the International Bureau of the World Intellectual Property Organization, pursuant to the Patent Cooperation Treaty.

6. A record in this system of records may be disclosed, as a routine use, to another federal agency for purposes of National Security review (35 U.S.C. 181) and for review pursuant to the Atomic Energy Act (42 U.S.C. 218(c)).

7. A record from this system of records may be disclosed, as a routine use, to the Administrator, General Services, or his/her designee, during an inspection of records conducted by GSA as part of that agency's responsibility to recommend improvements in records management practices and programs, under authority of 44 U.S.C. 2904 and 2906. Such disclosure shall be made in accordance with the GSA regulations governing inspection of records for this purpose, and any other relevant (i.e., GSA or Commerce) directive. Such disclosure shall not be used to make determinations about individuals.

8. A record from this system of records may be disclosed, as a routine use, to the public after either publication of the application pursuant to 35 U.S.C. 122(b) or issuance of a patent pursuant to 35 U.S.C. 151. Further, a record may be disclosed, subject to the limitations of 37 CFR 1.14, as a routine use, to the public if the record was filed in an application which became abandoned or in which the proceedings were terminated and which application is referenced by either a published application, an application open to public inspections or an issued patent.

9. A record from this system of records may be disclosed, as a routine use, to a Federal, State, or local law enforcement agency, if the USPTO becomes aware of a violation or potential violation of law or regulation.

INTERNATIONAL SEARCH REPORT

International application No
PCT/IB2013/001191

A. CLASSIFICATION OF SUBJECT MATTER
INV. A61C5/02
ADD.

According to International Patent Classification (IPC) or to both national classification and IPC

B. FIELDS SEARCHED

Minimum documentation searched (classification system followed by classification symbols)
A61C

Documentation searched other than minimum documentation to the extent that such documents are included in the fields searched

Electronic data base consulted during the international search (name of data base and, where practicable, search terms used)

EPO-Internal, WPI Data

C. DOCUMENTS CONSIDERED TO BE RELEVANT

Category*	Citation of document, with indication, where appropriate, of the relevant passages	Relevant to claim No.
X	US 2006/265858 A1 (MCSPADDEN JOHN T [US]) 30 November 2006 (2006-11-30) paragraph [0037] paragraph [0043] paragraph [0044] figure 3G	1-9

A	US 2005/100859 A1 (GRAYBILL LONNIE M [US] ET AL) 12 May 2005 (2005-05-12) paragraph [0045] figures 1-4,10-14	1-9

A	DE 10 2006 007316 A1 (VDW GMBH [DE]) 30 August 2007 (2007-08-30) figures 3A-3E	1-9

	-/--	

[X] Further documents are listed in the continuation of Box C.

[X] See patent family annex.

* Special categories of cited documents :

"A" document defining the general state of the art which is not considered to be of particular relevance

"E" earlier application or patent but published on or after the international filing date

"L" document which may throw doubts on priority claim(s) or which is cited to establish the publication date of another citation or other special reason (as specified)

"O" document referring to an oral disclosure, use, exhibition or other means

"P" document published prior to the international filing date but later than the priority date claimed

"T" later document published after the international filing date or priority date and not in conflict with the application but cited to understand the principle or theory underlying the invention

"X" document of particular relevance; the claimed invention cannot be considered novel or cannot be considered to involve an inventive step when the document is taken alone

"Y" document of particular relevance; the claimed invention cannot be considered to involve an inventive step when the document is combined with one or more other such documents, such combination being obvious to a person skilled in the art

"&" document member of the same patent family

Date of the actual completion of the international search	Date of mailing of the international search report
6 September 2013	13/09/2013
Name and mailing address of the ISA/ European Patent Office, P.B. 5818 Patentlaan 2 NL - 2280 HV Rijswijk Tel. (+31-70) 340-2040, Fax: (+31-70) 340-3016	Authorized officer Fortune, Bruce

1

Form PCT/ISA/210 (second sheet) (April 2005)

INTERNATIONAL SEARCH REPORT

International application No
PCT/IB2013/001191

C(Continuation). DOCUMENTS CONSIDERED TO BE RELEVANT

Category*	Citation of document, with indication, where appropriate, of the relevant passages	Relevant to claim No.
A	US 2005/282109 A1 (HAGEMANN FRANK [DE]) 22 December 2005 (2005-12-22) paragraph [0001] paragraph [0037] - paragraph [0043] figures 2-5 -----	1-9

1

Form PCT/ISA/210 (continuation of second sheet) (April 2005)

INTERNATIONAL SEARCH REPORT

Information on patent family members

International application No
PCT/IB2013/001191

Patent document cited in search report	Publication date	Patent family member(s)	Publication date
US 2006265858 A1	30-11-2006	NONE	
US 2005100859 A1	12-05-2005	US 2005100859 A1	12-05-2005
		WO 2006044545 A2	27-04-2006
DE 102006007316 A1	30-08-2007	NONE	
US 2005282109 A1	22-12-2005	AT 417566 T	15-01-2009
		DE 202004007925 U1	19-08-2004
		EP 1598027 A1	23-11-2005
		US 2005282109 A1	22-12-2005

Espacenet

Bibliographic data: DE102006007316 (A1) — 2007-08-30

Tooth root canal instrument for tooth root canal treatment and dressing of tooth root canal by dentist, has two units at support-sided end of root canal instrument, and are connected with supply canal

Inventor(s): LANKES KONRAD [DE]; BORGSCHULTE MARKUS [DE] ± (LANKES, KONRAD, ; BORGSCHULTE, MARKUS)

Applicant(s): VDW GMBH [DE] ± (VDW GMBH)

Classification: **- international:** *A61C3/00*
- cooperative: A61C5/023; A61C1/055

Application number: DE20061007316 20060216

Priority number(s): DE20061007316 20060216

Also published as: DE102006007316 (B4)

Abstract of DE102006007316 **(A1)**

The tooth root canal instrument has a unit for retaining the tooth root canal instrument in a drive device. Another unit is provided for supply of lubricating fluid or rinsing fluid or a compressed gas as compressed air and ozone. Both units are provided at the support-sided end of the root canal instrument and connected with a supply canal (3), which leads to the work area of an instrument part (2). An outlet is provided in the work area of the instrument part, which leads outwards from the supply canal.

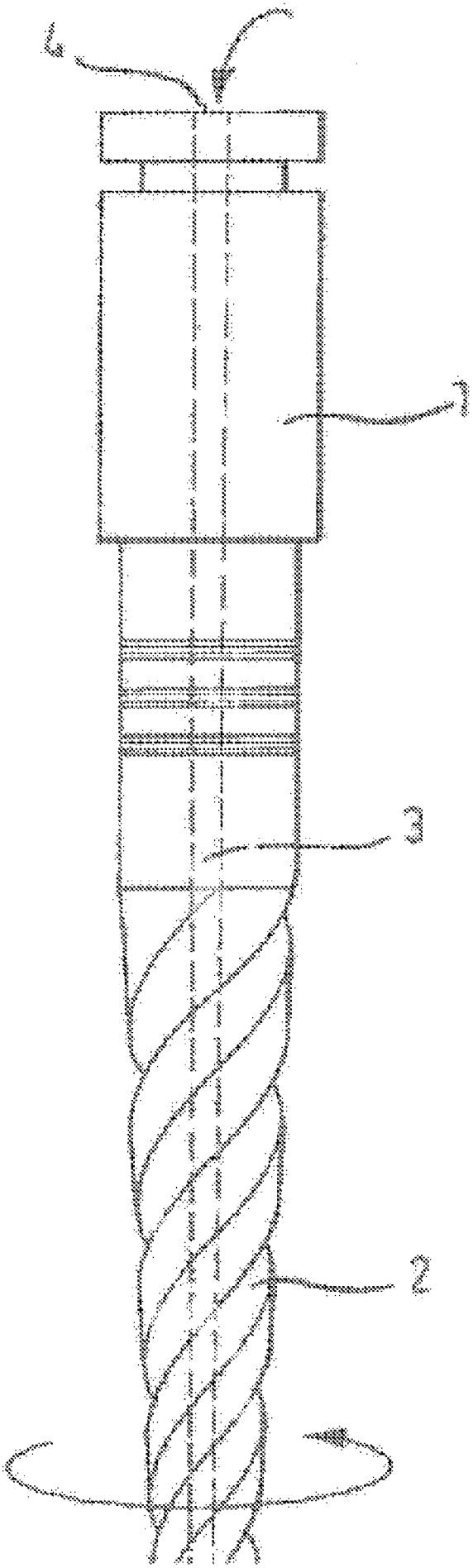

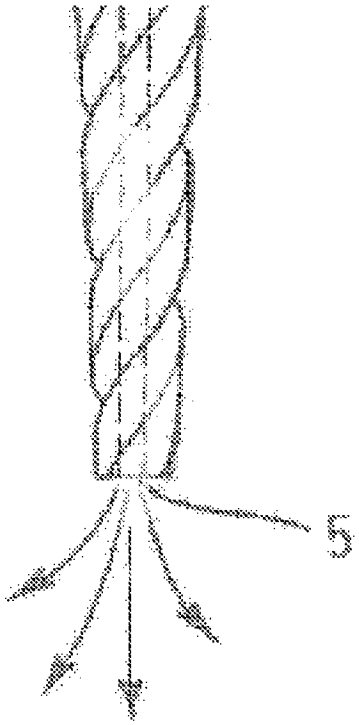

(19) Bundesrepublik Deutschland
Deutsches Patent- und Markenamt

(10) **DE 10 2006 007 316 A1** 2007.08.30

(12) **Offenlegungsschrift**

(21) Aktenzeichen: **10 2006 007 316.9**
(22) Anmeldetag: **16.02.2006**
(43) Offenlegungstag: **30.08.2007**

(51) Int Cl.[8]: ***A61C 3/00*** (2006.01)

(71) Anmelder:
VDW GmbH, 81737 München, DE

(74) Vertreter:
Wilhelms, Kilian & Partner, 81541 München

(72) Erfinder:
Lankes, Konrad, 81829 München, DE;
Borgschulte, Markus, 81543 München, DE

(56) Für die Beurteilung der Patentfähigkeit in Betracht gezogene Druckschriften:
DE10 2004 053343 A1
DE 44 13 804 A1
DE 295 15 503 U1
DE 84 17 483 U1
DE 699 29 921 T2
CH 6 90 294 A5
US2004/02 19 482 A1
WO 04/0 58 089 A1
WO 99/63 902 A1

Die folgenden Angaben sind den vom Anmelder eingereichten Unterlagen entnommen

Prüfungsantrag gemäß § 44 PatG ist gestellt.

(54) Bezeichnung: **Zahnwurzelkanalinstrument**

(57) Zusammenfassung: Zahnwurzelkanalinstrument mit einem Halter (1) und einem daran angebrachten Instrumententeil (2). Am Ende des Halters (1) ist eine Einrichtung zum Aufnehmen des Zahnwurzelkanalinstrumentes in einer Drehantriebseinrichtung vorgesehen. Hier befindet sich auch eine Einrichtung zum Zu- und/oder Abführen von Spül- und/oder Schmiermittelflüssigkeiten bzw. Druckgas, die mit einem Zuführkanal (3) verbunden ist, der zum Arbeitsbereich des Instrumententeils (2) führt. In diesem Bereich ist wenigstens eine Austrittsöffnung (5) vorgesehen, die vom Zuführkanal (3) nach außen führt. Ein derartiges Zahnwurzelkanalinstrument kombiniert die mechanische und die chemische Aufbereitung eines Zahnwurzelkanals und ermöglicht eine schnelle Zahnwurzelkanalaufbereitung mit hoher Qualität.

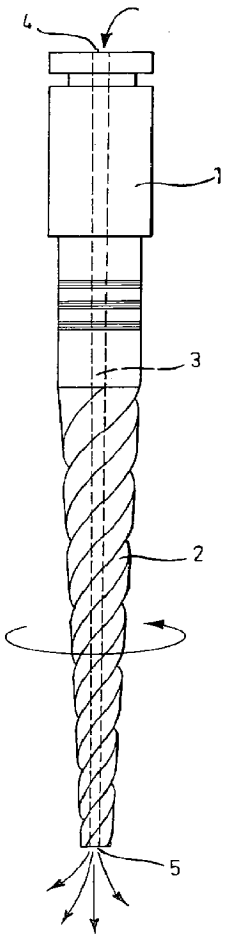

Beschreibung

[0001] Die Erfindung betrifft ein Zahnwurzelkanalinstrument mit einem Halter und einem daran angebrachten Instrumententeil.

[0002] Ein derartiges Zahnwurzelkanalinstrument wird vom Zahnarzt zur Zahnwurzelkanalbehandlung und insbesondere zur Aufbereitung des Zahnwurzelkanals eingesetzt.

[0003] Für eine erfolgreiche Zahnwurzelkanalbehandlung mit einem derartigen Zahnwurzelkanalinstrument ist die mechanische und chemische Reinigung des Zahnwurzelkanals unerlässlich.

[0004] Bisher wurde der maschinellen mechanischen Aufbereitung des Zahnwurzelkanals der Vorzug gegeben, in der Zwischenzeit besteht aber auch die Neigung, eine maschinell unterstützte chemische Reinigung einzusetzen.

[0005] Der Zeitaufwand einer Zahnwurzelkanalbehandlung ist nicht nur aus wirtschaftlichen Aspekten sondern indirekt auch für die Qualität der Zahnwurzelkanalbehandlung von besonderer Bedeutung. Bisher erfolgte eine mechanische und eine chemische Aufbereitung mit hohem Zeitaufwand für die chemische Reaktionszeit.

[0006] Die der Erfindung zugrunde liegende Aufgabe besteht demgegenüber darin, ein Zahnwurzelkanalinstrument der eingangs genannten Art zu schaffen, mit dem eine Zahnwurzelkanalaufbereitung in kürzerer Zeit und in hoher Qualität und damit eine erfolgreiche und wirtschaftliche Zahnwurzelkanalbehandlung möglich sind.

[0007] Diese Aufgabe wird gemäß der Erfindung durch ein Zahnwurzelka nalinstrument gelöst, das im Patentanspruch 1 angegeben ist.

[0008] Bei dem erfindungsgemäßen Zahnwurzelkanalinstrument ist die me chanische Aufbereitung mit der chemischen Aufbereitung kombiniert, wobei die Spülung zusätzlich dadurch verbessert worden ist, dass die Spüllösung erwärmt werden kann, eine Druckkontrolle möglich ist, ein gleichzeitiges Absaugen der Spülflüssigkeit erfolgen kann und damit ein optimaler Dentinspanabtrag und das Auflösen der so genannten Smear-Layers möglich sind.

[0009] In dieser Weise wird die oben angegebene Aufgabe gelöst.

[0010] Besonders bevorzugte Ausgestaltungen und Weiterbildungen des erfindungsgemäßen Zahnwurzelkanalinstrumentes sind Gegenstand der Patentansprüche 2 bis 8.

[0011] Im Folgenden werden anhand der zugehörigen Zeichnung besonders bevorzugte Ausführungsbeispiele des erfindungsgemäßen Zahnwurzelkanalinstrumentes näher beschrieben. Es zeigen

[0012] Fig. 1A bis Fig. 1C ein ersten Ausführungsbeispiel des erfindungsgemäßen Zahnwurzelkanalinstrumentes, wobei

[0013] Fig. 1A eine Seitenansicht des gesamten Instrumentes,

[0014] Fig. 1B eine perspektivische Ansicht eines Teils des Instrumententeils und

[0015] Fig. 1C eine Querschnittsansicht des Instrumententeils zeigen,

[0016] Fig. 2 in einer Schnittansicht die Benutzung des **Fig.** 1 dargestellten Zahnwurzelkanalinstrumentes im Zahnwurzelkanal,

[0017] Fig. 3A bis Fig. 3E in Schnittansichten verschiedene Ausführungsbeispiele des Flüssigkeitszuführkanals und

[0018] Fig. 4 ein weiteres Ausführungsbeispiel des erfindungsgemäßen Zahnwurzelkanalinstrumentes in einer Seitenansicht.

[0019] Das in Fig. 1A bis Fig. 1C dargestellte Ausführungsbeispiel des erfindungsgemäßen Zahnwurzelkanalinstrumentes umfasst im Wesentlichen einen Halter **1** und einen daran angebrachten Instrumententeil **2**.

[0020] Am halterseitigen Ende des Zahnwurzelkanalinstrumentes, d.h. am oberen Ende des Halters **1** ist eine Einrichtung vorgesehen, mit der das Zahnwurzelkanalinstrument in einer Drehantriebseinrichtung aufgenommen werden kann, bei der es sich um eine elektrische oder druckluftbetriebene Antriebsvorrichtung handeln kann.

[0021] Als Antriebseinrichtung kommt auch ein das Instrument in Ultraschallschwingungen versetzender Antrieb, z.B. ein piezoelektrischer oder magnetostriktiver Antrieb in Frage.

[0022] Weiterhin ist am halterseitigen Ende des Zahnwurzelkanalinstrumentes eine Zu- und/oder Abführung **4** zum Zu- und Abführen von Spül- und/oder Schmiermittelflüssigkeiten vorgesehen, die über einen Zuführkanal **3** zum Arbeitsbereich des Instrumententeils **2** führt, wie es durch Pfeile in Fig. 1A wiedergegeben ist. Am unteren Ende des Instrumententeils befindet sich eine weitere Öffnung **5**, die vom Zuführkanal **3** nach außen führt und als Austrittsöffnung für die zugeführte Flüssigkeit dient.

[0023] Wie es in Fig. 1B und Fig. 1C im Einzelnen dargestellt ist, kann das Zahnwurzelkanalinstrument hohl ausgebildet sein, so dass der Zuführkanal **3** aus dem Hohlraum im Zahnwurzelkanalinstrument besteht.

[0024] Über den Zuführkanal **3** können somit Flüssigkeiten zwischen der Öffnung **4** am halterseitigen Ende und der Öffnung **5** am instrumentenseitigen Ende transportiert werden. Dieser Zuführkanal **3** kann aber auch zum Transport eines Druckgases, z.B. Druckluft, Ozon oder dergleichen verwendet werden.

[0025] Wie es in Fig. 2 dargestellt ist, wird beim Arbeiten mit dem in **Fig.** 1 dargestellten Zahnwurzelkanalinstrument dieses am halterseitigen Ende in eine Drehantriebseinrichtung eingesetzt und gedreht. Die Öffnung **4** am halterseitigen Ende wird mit einer Spül- und/oder Schmiermittelflüssigkeitszuführeinrichtung verbunden, die beispielsweise eine Pumpe aufweist.

[0026] Während das Zahnwurzelkanalinstrument durch die Drehantriebseinrichtung gedreht wird, wird Spül- und/oder Schmiermittelflüssigkeit über den Zuführkanal **3** zum Instrumententeil **2** befördert, wo diese Flüssigkeit an der Öffnung **5** am instrumentenseitigen Ende wieder austritt.

[0027] Wie es in den Fig. 3A bis Fig. 3E dargestellt ist, kann der Zuführkanal **3** in verschiedener Weise ausgebildet sein. Die Fig. 3A bis Fig. 3E zeigen die verschiedenen Möglichkeiten der Ausbildung des Zuführkanals **3** jeweils in Schnittansichten.

[0028] Wie es in Fig. 3A dargestellt ist, kann der Instrumententeil hohl ausgebildet sein, wobei der Zuführkanal in der dargestellten Weise exzentrisch vorgesehen sein kann.

[0029] Bei einem Instrumententeil **2** mit dreieckigem Querschnitt kann der Zuführkanal **3** in Form einer zentralen Bohrung gleich beabstandet von allen drei Dreieckseiten vorgesehen sein, wie es in Fig. 3B dargestellt ist.

[0030] Wie es in Fig. 3C dargestellt ist, können auch zwei parallele Kanäle vorgesehen sein, von denen der eine den Transport von Flüssigkeiten von der halterseitigen Öffnung **4** zur instrumentenseitigen Öffnung **5** ermöglicht und der zweite Kanal für den entsprechenden Rücktransport der Flüssigkeiten von der instrumentenseitigen Öffnung **5** zur halterseitigen Öffnung **4** sorgt.

[0031] Obwohl in der Zeichnung und insbesondere in **Fig.** 1 die Öffnung **5** zum Abführen der Flüssigkeiten am instrumentenseitigen Ende dargestellt ist, kann diese Öffnung auch im Spanraum des Instrumententeils vorgesehen sein.

[0032] Vorzugsweise besteht der Instrumententeil aus einem Metallmaterial, einer Metalllegierung, aus Kunststoff oder Kombinationen aus diesen Materialien, z.B. Edelstahl, NiTi, einem Keramikmaterial mit oder ohne Beschichtung.

[0033] Fig. 4 zeigt ein Ausführungsbeispiel des erfindungsgemäßen Zahnwurzelkanalinstrumentes, bei dem mehrere Öffnungen zum Abführen von Flüssigkeiten axial im Abstand voneinander im Spanraum am Instrumententeil vorgesehen sind.

[0034] Bei dem in Fig. 4 dargestellten Ausführungsbeispiel ist durch Doppelpfeile am halterseitigen Ende angedeutet, dass die Spülflüssigkeit zum Spülen zugeführt und/oder abgepumpt werden kann.

Patentansprüche

1. Zahnwurzelkanalinstrument mit einem Halter und einem daran angebrachten Instrumententeil, **dadurch gekennzeichnet**, dass am halterseitigen Ende des Zahnwurzelkanalinstrumentes eine Einrichtung zum Aufnehmen des Zahnwurzelkanalinstrumentes in einer Antriebseinrichtung und eine Einrichtung zum Zu- und/oder Abführen von Spül- und/oder Schmiermittelflüssigkeit oder eines Druckgases wie Druckluft, Ozon und dergleichen vorgesehen sind, die mit einem Zuführkanal verbunden sind, der zum Arbeitsbereich des Instrumententeils führt, und im Arbeitsbereich des Instrumententeils wenigstens eine Austrittsöffnung vorgesehen ist, die vom Zuführkanal nach außen führt.

2. Zahnwurzelkanalinstrument nach Anspruch 1, dadurch gekennzeichnet, dass die Antriebseinrichtung ein Drehantrieb ist.

3. Zahnwurzelkanalinstrument nach Anspruch 1 oder 2, dadurch gekennzeichnet, dass die Drehantriebseinrichtung eine elektrisch oder druckluftbetriebene Einrichtung ist.

4. Zahnwurzelkanalinstrument nach Anspruch 1, 2 oder 3, dadurch gekennzeichnet, dass es innen hohl ausgebildet ist.

5. Zahnwurzelkanalinstrument nach Anspruch 4, dadurch gekennzeichnet, dass es innen zwei Hohlkanäle aufweist.

6. Zahnwurzelkanalinstrument nach einem der vorhergehenden Ansprüche, dadurch gekennzeichnet, dass die Austrittsöffnung am instrumentenseitigen Ende des Instrumententeils vorgesehen ist.

7. Zahnwurzelkanalinstrument nach einem der Ansprüche 1 bis 5, dadurch gekennzeichnet, dass die Austrittsöffnung im Bereich des Spanraumes des Instrumententeils vorgesehen ist.

8. Zahnwurzelkanalinstrument nach einem der Ansprüche 1 bis 5, dadurch gekennzeichnet, dass mehrere Austrittsöffnungen axial im Abstand voneinander am Instrumententeil vorgesehen sind.

Es folgen 6 Blatt Zeichnungen

Anhängende Zeichnungen

FIG. 1A

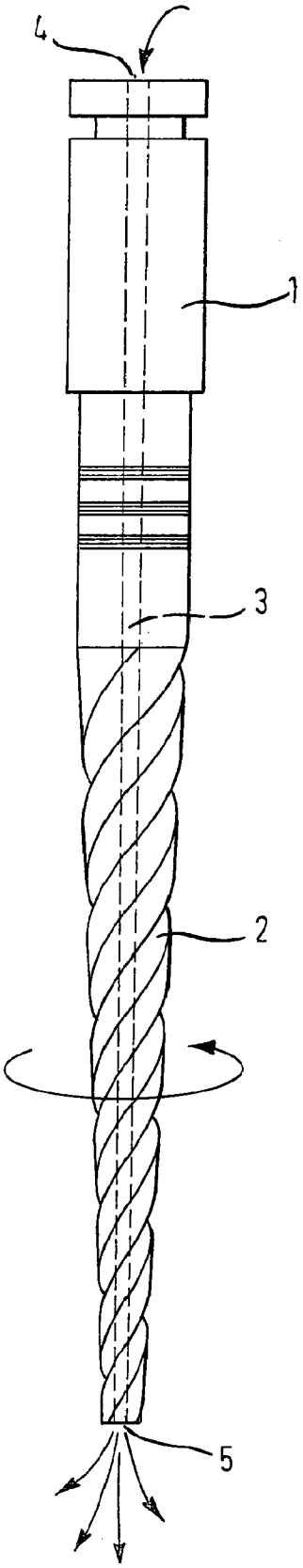

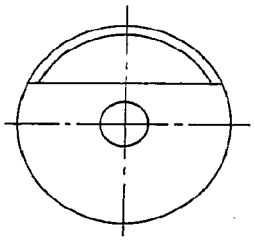

FIG. 1B

FIG. 1C

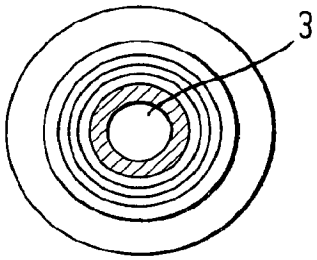

FIG. 2

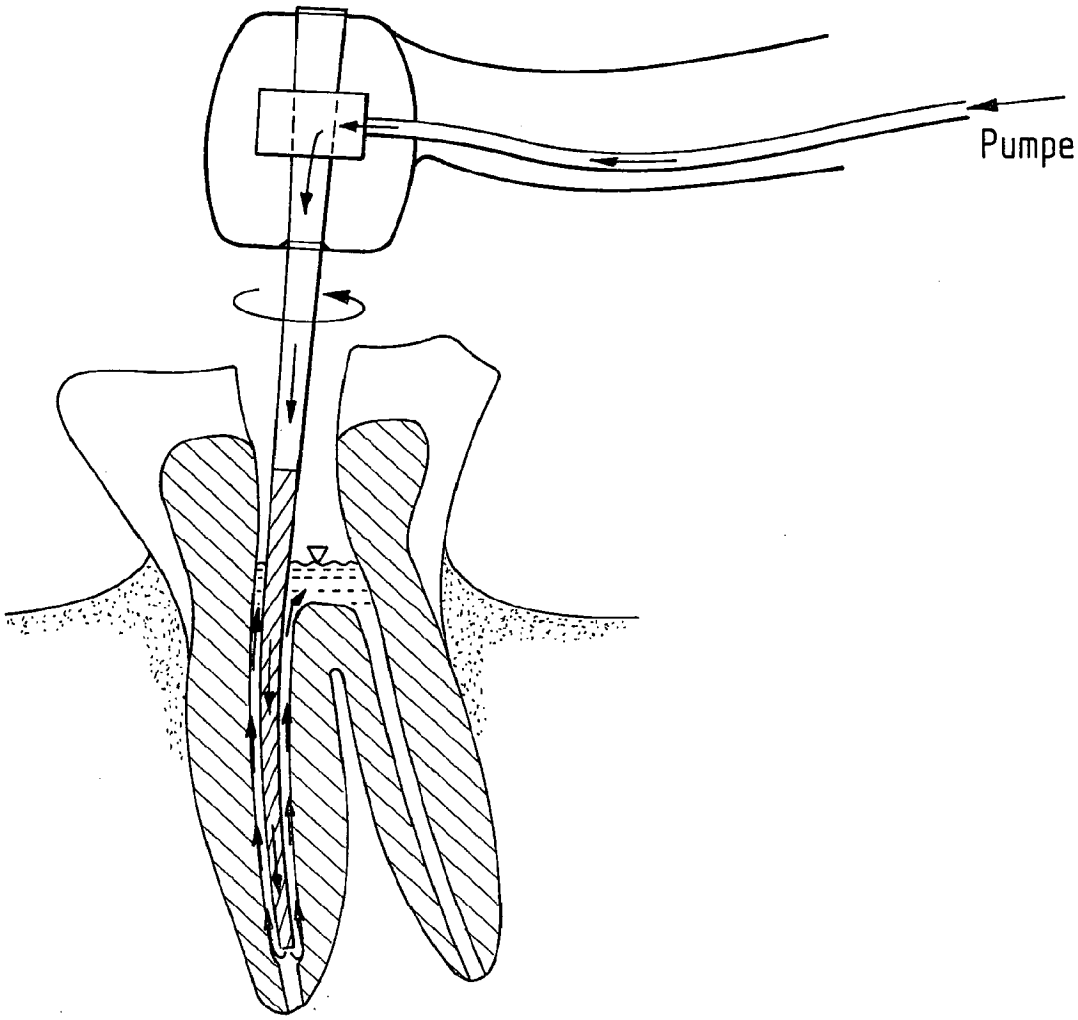

FIG. 3A

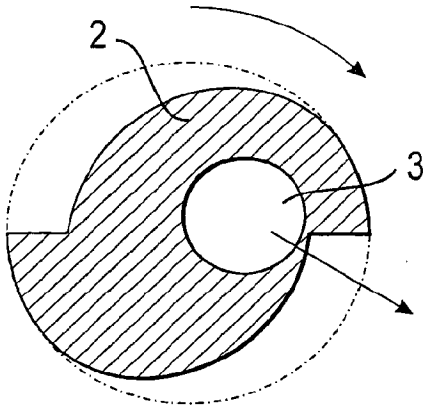

FIG. 3B

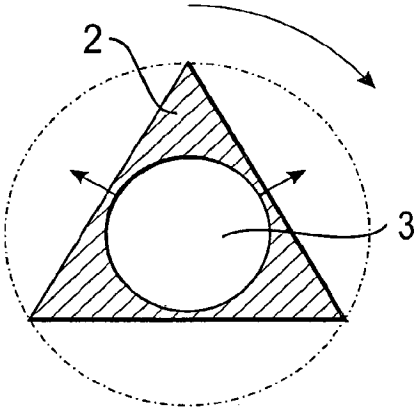

FIG. 3C

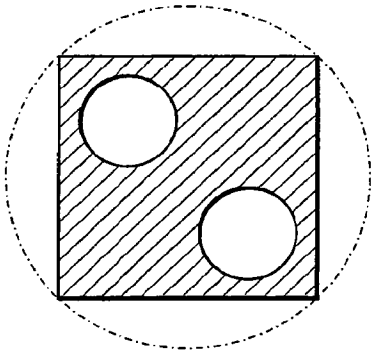

FIG. 3D

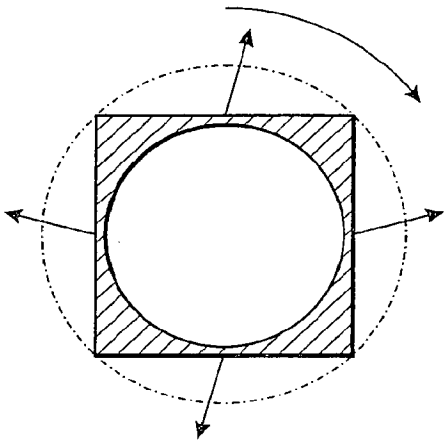

FIG. 3E

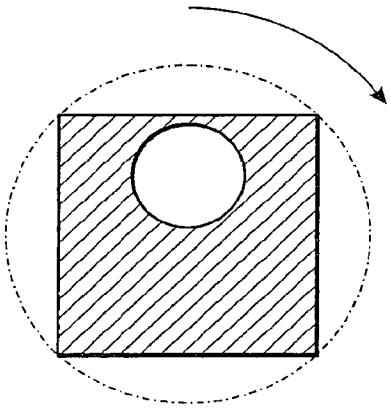

FIG. 4

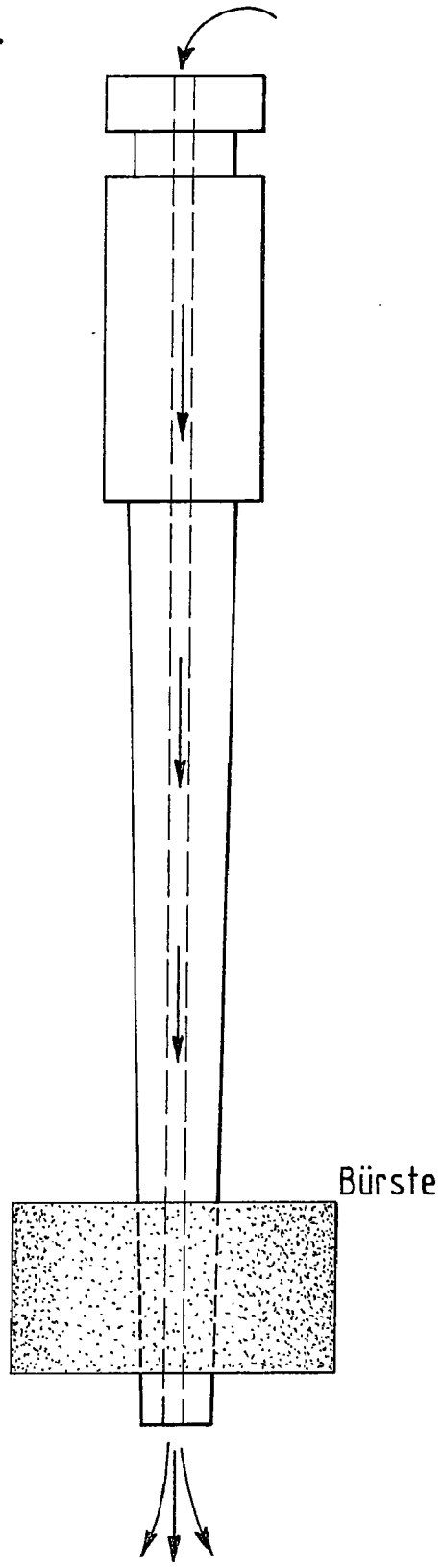

FIG. 5

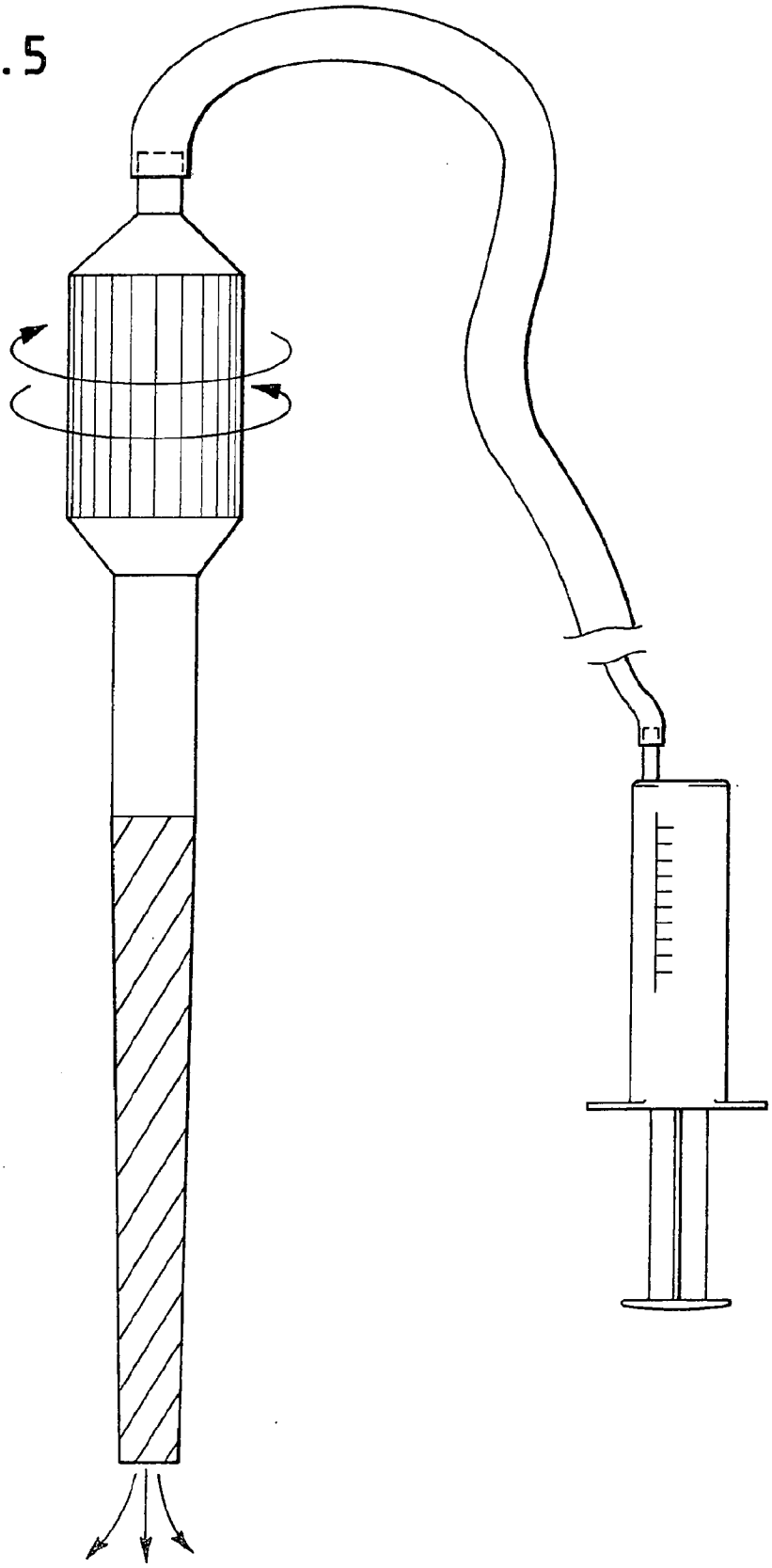

FIG. 6

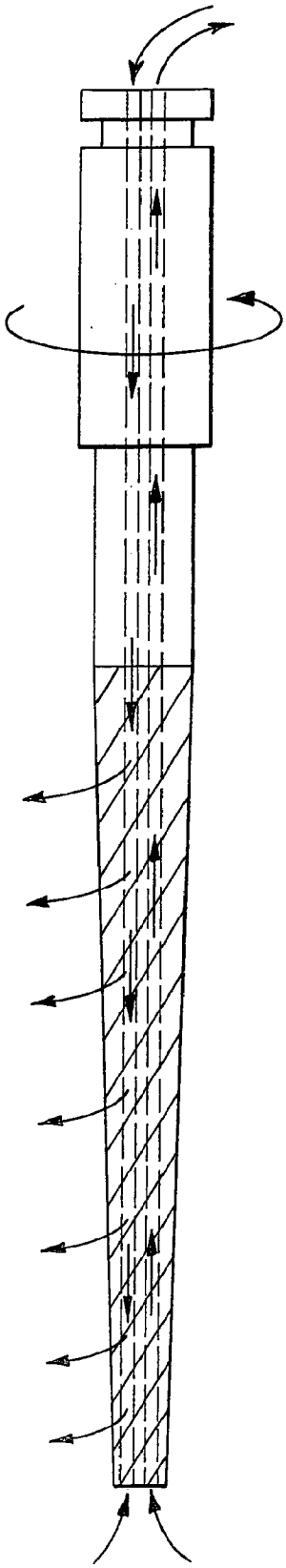

Espacenet

Bibliographic data: EP1361831 (A1) — 2003-11-19

DRILLING INSTRUMENT, IN PARTICULAR FOR DRILLING DENTAL ROOT CANALS

Inventor(s): ROUILLER JEAN-CLAUDE [CH]; BREGUET OLIVIER [CH] ± (ROUILLER, JEAN-CLAUDE, ; BREGUET, OLIVIER)

Applicant(s): ROUILLER JEAN CLAUDE [CH] ± (ROUILLER, JEAN-CLAUDE)

Classification: **- international:** ***A61B17/16; A61C5/02; B23C5/10;*** (IPC1-7): A61B17/16; A61C5/02; B23C5/10
- cooperative: **A61B17/1615**; **A61C5/023**; **B23C5/10**; B23C2210/088; B23C2210/402; B23C2265/08; B23C2265/32; Y10T408/9097

Application number: EP20020710745 20020219

Priority number(s): WO2002CH00098 20020219 ; FR20010002452 20010220

Also published as: EP1361831 (B1) FR2821000 (A1) FR2821000 (B1) AT367775 (T) JP2004522532 (A) more

Abstract not available for EP1361831 (A1)
Abstract of corresponding document: FR2821000 (A1)

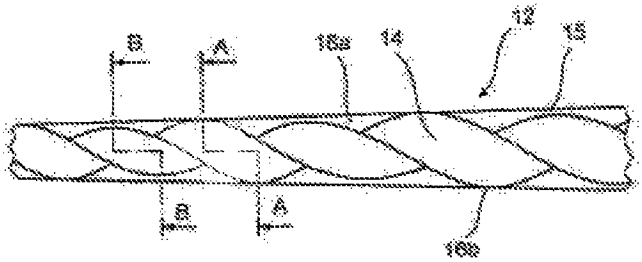

The invention concerns a drilling instrument (10), in particular for drilling dental root canals comprising a base (11) and a guide section (13) as well as a polygonal cutting section (12). Said cutting section includes several helical cutting edges (17) defining an envelope (15). The flutes (14), which are the surfaces linking the cutting edges, are cut out such that part of them define clearance zones (16a) alternately arranged between the drilling zones (16b). In the central part of a clearance zone (16a), the cutting edges (17) are all arranged recessed inside the envelope (15), in the central part of the drilling zone (16b), said cutting edges are all arranged on the envelope, and in a zone intermediate between a clearance zone (16a) and an adjacent drilling zone (16b), at least one

cutting edge is on the envelope and at least one cutting edge is recessed inside the envelope.

(19) Europäisches Patentamt
European Patent Office
Office européen des brevets

(11) Veröffentlichungsnummer:
(11) Publication number:
(11) Numéro de publication:

EP 1 361 831 A0

Internationale Anmeldung veröffentlicht durch die Weltorganisation für geistiges Eigentum unter der Nummer:

WO 02/065938 (art. 158 des EPÜ).

International application published by the World Intellectual Property Organisation under number:

WO 02/065938 (art. 158 of the EPC).

Demande internationale publiée par l'Organisation Mondiale de la Propriété sous le numéro:

WO 02/065938 (art. 158 de la CBE).

PATENT
5001-1489

IN THE U.S. PATENT AND TRADEMARK OFFICE

In re application of

Gilbert ROTA et al. Conf.

Application No. **NEW NATIONAL PHASE** Group

Filed June 12, 2015 Examiner

INSTRUMENT FOR BORING DENTAL ROOT CANALS

PRELIMINARY AMENDMENT

Assistant Commissioner for Patents June 12, 2015
P.O. Box 1450
Alexandria, VA 22313-1450

Sir:

The following preliminary amendments and remarks are respectfully submitted in connection with the above-identified application.

Amendments to the Specification begin on page 2 of this paper.

Amendments to the Claims are reflected in the listing of claims which begin on page 3 of this paper.

Remarks begin on page 8 of this paper.

An **Appendix** is attached following the signature page of this paper.

AMENDMENTS TO THE SPECIFICATION:

Please cancel the originally-filed title and add the accompanying new title as follows:

--INSTRUMENT FOR DRILLING DENTAL ROOT CANALS--

Please cancel the originally-filed Abstract of the Disclosure, and add the accompanying new Abstract of the Disclosure which appears on a separate sheet in the Appendix.

AMENDMENTS TO THE CLAIMS:

If the present amendment is a preliminary amendment filed in the National Stage of a PCT application, the US DO/EO is directed NOT to enter any claim amendment made under Article 19 or Article 34 during prosecution of the International Stage of this application.

This listing of claims which follows on the next page will replace all prior versions, and listings of claims in the application:

LISTING OF CLAIMS:

1. (original) Instrument for drilling dental root canals comprising a tapered rod (1) having over at least a part of its length - the active part (1b) - a polygonal cross-section (4) forming at least two cutting edges (5a, 5b; 52, 54), said active part (1b) terminating by a point (3) and being defined by an envelope (7) of a cylindrical or conical shape, the longitudinal axis of which coincides with the axis of rotation (R) of the instrument, characterised in that said active part (1b) has a first portion (1c) extending from the point (3) and a second portion (1d) extending following the first portion (1c) towards the rear of the active part (1b); by the fact that any cross-section (4a; 4'a; 40a) of the first portion (1c) has a centre of mass (ma; m'a m40a) located on the axis of rotation (R) and that said at least two cutting edges (5a, 5b; 52, 54) defined by said cross-section (4a; 4'a; 40a) are located on the envelope (7); and by the fact that at least one cross-section (4b; 4'b; 401b) of the second portion (1d) has a centre of mass (mb; m'b m401b) offset with respect to the axis of rotation (R) and at least one cutting edge (5a; 52, 54) defined by said cross-section (4b; 4'b; 401b) is located set back within the envelope (7).

2. (original) Instrument as claimed in claim 1, characterised in that any cross-section (4b; 4'b) of the second portion (1d) has a centre of mass (mb; m'b) offset with respect to the axis of rotation (R) and at least one cutting edge (5a) defined by said cross-section (4b; 4'b) is located set back within the envelope (7).

3. (original) Instrument as claimed in claim 2, characterised in that exactly one cutting edge (5a) defined by any cross-section (4b) of the second portion (1d) of the active part (1b) is located on the envelope (7).

4. (currently amended) Instrument as claimed in claim 2 ~~any one of claims 2 or 3~~, characterised in that a cross-section (4b) of the second portion (1d) of the active part (1b) located close to the point (3) has a centre of mass (mb) proportionally closer to the axis of rotation (R) than the centre of mass of a cross-section of said second portion (1d) located at the rear of the active part (1b).

5. (original) Instrument as claimed in claim 1, characterised in that the second portion (1d) has an alternating arrangement of centred zones (12) in which any cross-section (402b) has a centre of mass (m402b) on the axis of rotation (R) and said at least two cutting edges (52, 54) defined by

said cross-section (402b) are located on the envelope (7) and off-centre zones (11) in which any cross-section (401b) has a centre of mass (m401b) offset with respect to said axis of rotation (R) and at least one cutting edge (52, 54) defined by said cross-section (401b) is located set back within the envelope (7).

6. (original) Instrument as claimed in claim 5, characterised in that the off-centre zones (11) alternate between first zones in which for any cross-section (401b) a first (52) of the at least two cutting edges (52, 54) defined by said cross-section is located set back within the envelope (7) while the second (54) of the at least two cutting edges is located on the envelope (7) and second zones in which for any cross-section, the second (54) of the at least two cutting edges (52) defined by said cross-section is located set back within the envelope (7) while the first (52) is located on the envelope (7).

7. (currently amended) Instrument as claimed in claim 1 ~~any one of the preceding claims~~, characterised in that the active part (1b) has over its whole length a polygonal cross-section with straight sides.

8. (currently amended) Instrument as claimed in claim 1 ~~any one of the preceding claims~~, characterised in that the first portion (1c) of the active part (1b) has a square cross-section and that the second portion (1d) of the active part has a rectangular cross-section.

9. (currently amended) Instrument as claimed in claim 1 ~~any one of the preceding claims~~, characterised in that the first portion (1c) of the active part (1b) has a length between 1 and 3 millimetres.

10. (new) Instrument as claimed in claim 3, characterised in that a cross-section (4b) of the second portion (1d) of the active part (1b) located close to the point (3) has a centre of mass (mb) proportionally closer to the axis of rotation (R) than the centre of mass of a cross-section of said second portion (1d) located at the rear of the active part (1b).

REMARKS

Claims 1-10 remain in this application. Claims 4 and 7-9 have been amended. New claim 10 has been added. No new matter has been added.

The original abstract has been deleted, and a new abstract has been added.

Entry of the above amendments is earnestly solicited. An early and favorable first action on the merits is earnestly requested.

Should there be any matters that need to be resolved in the present application, the Examiner is respectfully requested to contact the undersigned at the telephone number listed below.

The Commissioner is hereby authorized in this, concurrent, and future submissions, to charge any underpayment or credit any overpayment to Deposit Account No. 25-0120 for any additional fees required under 37 C.F.R. § 1.16 or under 37 C.F.R. § 1.17.

Respectfully submitted,

YOUNG & THOMPSON

/Benoît Castel/

Benoît Castel, Reg. No. 35,041
Customer No. 00466
209 Madison Street, Suite 500
Alexandria, VA 22314
Telephone (703) 521-2297
Facsimile (703) 685-0573
(703) 979-4709

BC/nmb

APPENDIX:

The Appendix includes the following item(s):

☒ - a new Abstract of the Disclosure

ABSTRACT

An instrument for drilling dental root canals includes a tapered rod having over at least a part of its length - the active part - a polygonal cross-section forming at least two cutting edges, the active part terminating by a point and being defined by an envelope of cylindrical or conical shape, whose longitudinal axis coincides with the instrument's axis of rotation. The active part has a first portion extending from the point and a second portion extending following the first portion towards the rear of the active part. At least one cross-section of the first portion has a centre of mass located on the axis of rotation and the cutting edges are located on the envelope. Any cross-section of the second portion has a centre of mass offset with respect to the axis of rotation and at least one cutting edge defined by the cross-section is located set back.

(12) DEMANDE INTERNATIONALE PUBLIÉE EN VERTU DU TRAITÉ DE COOPÉRATION EN MATIÈRE DE BREVETS (PCT)

VERSION CORRIGÉE

(19) Organisation Mondiale de la Propriété Intellectuelle
Bureau international

(43) Date de la publication internationale
7 août 2014 (07.08.2014)

WIPO | PCT

(10) Numéro de publication internationale
WO 2014/118591 A8

(51) Classification internationale des brevets : *A61C 5/02* (2006.01)

(21) Numéro de la demande internationale : PCT/IB2013/001191

(22) Date de dépôt international : 7 juin 2013 (07.06.2013)

(25) Langue de dépôt : français

(26) Langue de publication : français

(30) Données relatives à la priorité : PCT/IB2013/000108 30 janvier 2013 (30.01.2013) IB

(71) Déposant : **MAILLEFER INSTRUMENTS HOLDING SARL** [CH/CH]; Chemin du Verger 3, CH-1338 Ballaigues (CH).

(72) Inventeurs : **ROTA, Gilbert**; 8 rue Pré Jean, F-25160 Vaux et Chantegrue (FR). **VALLOTTON, Paul-Henri**; Rue du Melley 22 C, CH-1142 Pampigny (CH).

(74) Mandataire : **MICHELI & CIE SA**; 122, rue de Genève, C.P. 61, CH-1226 Thônex (CH).

(81) États désignés *(sauf indication contraire, pour tout titre de protection nationale disponible)* : AE, AG, AL, AM, AO, AT, AU, AZ, BA, BB, BG, BH, BN, BR, BW, BY, BZ, CA, CH, CL, CN, CO, CR, CU, CZ, DE, DK, DM, DO, DZ, EC, EE, EG, ES, FI, GB, GD, GE, GH, GM, GT, HN, HR, HU, ID, IL, IN, IS, JP, KE, KG, KN, KP, KR, KZ, LA, LC, LK, LR, LS, LT, LU, LY, MA, MD, ME, MG, MK, MN, MW, MX, MY, MZ, NA, NG, NI, NO, NZ, OM, PA, PE, PG, PH, PL, PT, QA, RO, RS, RU, RW, SC, SD, SE, SG, SK, SL, SM, ST, SV, SY, TH, TJ, TM, TN, TR, TT, TZ, UA, UG, US, UZ, VC, VN, ZA, ZM, ZW.

(84) États désignés *(sauf indication contraire, pour tout titre de protection régionale disponible)* : ARIPO (BW, GH, GM, KE, LR, LS, MW, MZ, NA, RW, SD, SL, SZ, TZ, UG, ZM, ZW), eurasien (AM, AZ, BY, KG, KZ, RU, TJ, TM), européen (AL, AT, BE, BG, CH, CY, CZ, DE, DK, EE, ES, FI, FR, GB, GR, HR, HU, IE, IS, IT, LT, LU, LV, MC, MK, MT, NL, NO, PL, PT, RO, RS, SE, SI, SK, SM, TR), OAPI (BF, BJ, CF, CG, CI, CM, GA, GN, GQ, GW, KM, ML, MR, NE, SN, TD, TG).

Publiée :

— *avec rapport de recherche internationale (Art. 21(3))*

(48) Date de publication de la présente version corrigée : 16 octobre 2014

(15) Renseignements relatifs à la correction : voir la Notice du 16 octobre 2014

(54) Title : INSTRUMENT FOR BORING DENTAL ROOT CANALS

(54) Titre : INSTRUMENT POUR L'ALESAGE DES CANAUX RADICULAIRES DENTAIRES

Fig.1

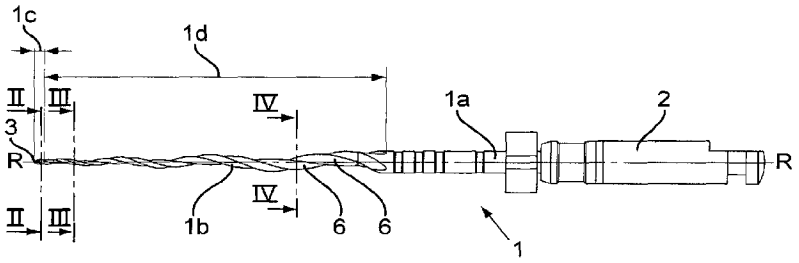

(57) Abstract : The invention relates to an instrument for boring dental root canals, comprising a thin rod (1) having, at least over part of the length thereof, a polygonal section (4) forming at least two cutting edges (5a, 5b) ending in a tip (3). Said length of the instrument has a first portion (1c) extending from the tip (3) and a second portion (1d) following on from the first portion (1c). At least one section (4a) of the first portion (1c) has a centre of mass (ma) located on the rotational axis. Every section (4b) of the second portion (1d) has a centre of mass (mb) that is offset in relation to the rotational axis and at least one cutting edge (5a) defined by said section (4b) is set back.

(57) Abrégé : Instrument pour l'alésage des canaux radiculaires dentaires comprenant une tige effilée (1) présentant sur au moins une partie de sa longueur, une section polygonale (4) formant au moins deux arêtes de coupe (5a, 5b) se terminant par une pointe (3). Ladite longueur de l'instrument comporte une première portion (1c) s'étendant depuis la pointe (3) et une seconde portion (1d) s'étendant à la suite de la première portion (1c). Au moins une section (4a) de la première portion (1c) présente un centre de masse (ma) situé sur l'axe de rotation. Toute section (4b) de la seconde portion (1d) présente un centre de masse (mb) décalé par rapport à l'axe de rotation et au moins une arête de coupe (5a) définie par ladite section (4b) est située en retrait.

WO 2014/118591 A8

Expéditeur : le BUREAU INTERNATIONAL

PCT

DEUXIÈME AVIS SUPPLÉMENTAIRE INFORMANT LE DÉPOSANT DE LA COMMUNICATION DE LA DEMANDE INTERNATIONALE (AUX OFFICES DÉSIGNÉS QUI APPLIQUENT LE DÉLAI DE 30 MOIS SELON L'ARTICLE 22.1))

(règle 47.1.c) du PCT)

Destinataire :

MICHELI & CIE SA
122, rue de Genève
C.P. 61
CH-1226 Thônex
SUISSE

Date d'expédition *(jour/mois/année)*
04 juin 2015 (04.06.2015)

Référence du dossier du déposant ou du mandataire
BM/CCM/ld/16350-PCT

AVIS IMPORTANT

Demande internationale nº	Date du dépôt international *(jour/mois/année)*	Date de priorité *(jour/mois/année)*
PCT/IB2013/001191	07 juin 2013 (07.06.2013)	30 janvier 2013 (30.01.2013)

Déposant
MAILLEFER INSTRUMENTS HOLDING SARL

1. **ATTENTION** : Pour tout office désigné auquel le délai selon l'article 22.1) tel qu'il est en vigueur depuis le 1er avril 2002 (30 mois à compter de la date de priorité) **ne s'applique pas**, se reporter au formulaire PCT/IB/308(Premier avis) émis antérieurement.

2. Il est notifié par la présente que l'office ou les offices désignés suivants – auxquels le délai selon l'article 22.1) tel qu'il est en vigueur depuis le 1er avril 2002 **s'applique** – ont demandé que la communication de la demande internationale, prévue à l'article 20, soit effectuée conformément à la règle 93*bis*.1. Le Bureau international a adressé cette communication à la date indiquée ci-dessous : 07 août 2014 (07.08.2014)

   AZ, BY, CN, EP, HU, KG, KP, KR, MD, MK, MZ, NA, NG, PG, RU, SY, TM

   Conformément à la règle 47.1.c-*bis*)i), ces offices accepteront le présent avis comme preuve déterminante du fait que la communication de la demande internationale a bien été effectuée à la date d'expédition indiquée ci-dessus et il ne sera pas exigé du déposant qu'il fournisse une copie de la demande internationale à l'office ou aux offices désignés.

3. Les offices désignés suivants, auxquels le délai selon l'article 22.1) tel qu'il est en vigueur depuis le 1er avril 2002 **s'applique**, n'ont pas demandé, à la date d'expédition du présent avis, que la communication de la demande internationale soit effectuée conformément à la règle 93*bis*.1 :

   AE, AG, AL, AM, AO, AP, AT, AU, BA, BB, BG, BH, BN, BR, BW, BZ, CA, CH, CL, CO, CR, CU, CZ, DE, DK, DM, DO, DZ, EA, EC, EE, EG, ES, FI, GB, GD, GE, GH, GM, GT, HN, HR, ID, IL, IN, IS, JP, KE, KN, KZ, LA, LC, LK, LR, LS, LT, LY, MA, ME, MG, MN, MW, MX, MY, NI, NO, NZ, OA, OM, PA, PE, PH, PL, PT, QA, RO, RS, RW, SC, SD, SE, SG, SK, SL, SM, ST, SV, TH, TJ, TN, TR, TT, UA, US, UZ, VC, VN, ZA, ZM, ZW

   Conformément à la règle 47.1.c-*bis*)ii), ces offices accepteront le présent avis comme preuve déterminante du fait que l'État contractant pour lequel cet office agit en tant qu'office désigné n'exige pas du déposant qu'il fournisse en vertu de l'article 22 une copie de la demande internationale.

4. **DÉLAIS pour l'ouverture de la phase nationale**

   Pour le ou les offices désignés ou élus mentionnés ci-dessus, le délai applicable pour l'ouverture de la phase nationale sera, **sous réserve de ce qui est dit au paragraphe suivant,** de **30 MOIS** à compter de la date de priorité.

   En pratique, **des délais autres que celui de 30 mois** continueront de s'appliquer, pour des durées diverses, en ce qui concerne certains offices désignés ou élus mentionnés ci-dessus. Pour obtenir **les mises à jour régulières relatives aux délais applicables** (30 ou 31 mois, ou autre délai), office par office, on se reportera à la *Gazette du PCT*, au bulletin *PCT Newsletter* ainsi qu'aux chapitres nationaux pertinents dans le volume II du *Guide du déposant du PCT*, accessibles sur le site Internet de l'OMPI à l'adresse suivante : http://www.wipo.int/pct/fr/index.html.

   Le déposant est **seul responsable** du respect de tous les délais visés ci-dessus.

Bureau international de l'OMPI
34, chemin des Colombettes
1211 Genève 20, Suisse

nº de télécopieur +41 22 338 82 70

Fonctionnaire autorisé
Cécile Chatel

courriel : ro.ib@wipo.int

Fig.1

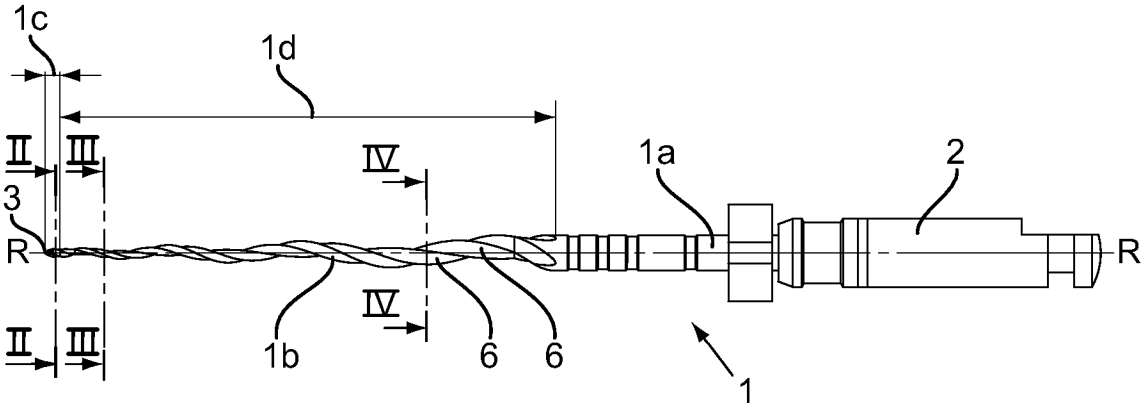

Fig.2

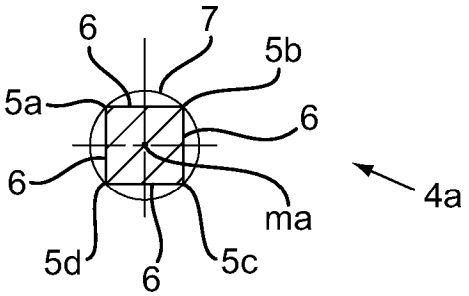

Fig.3

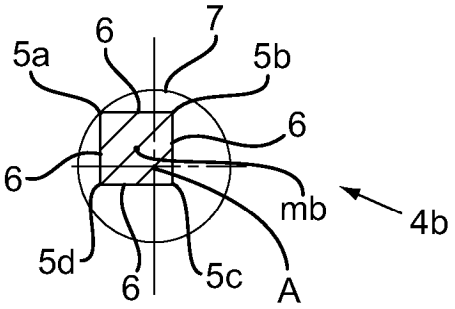

Fig.4

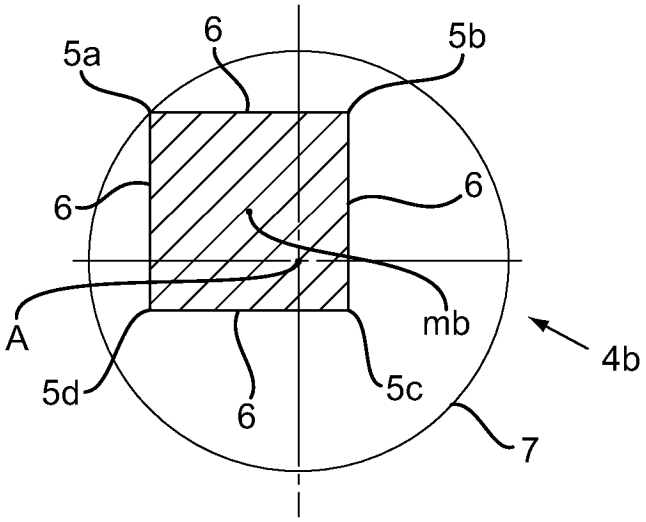

Fig.5

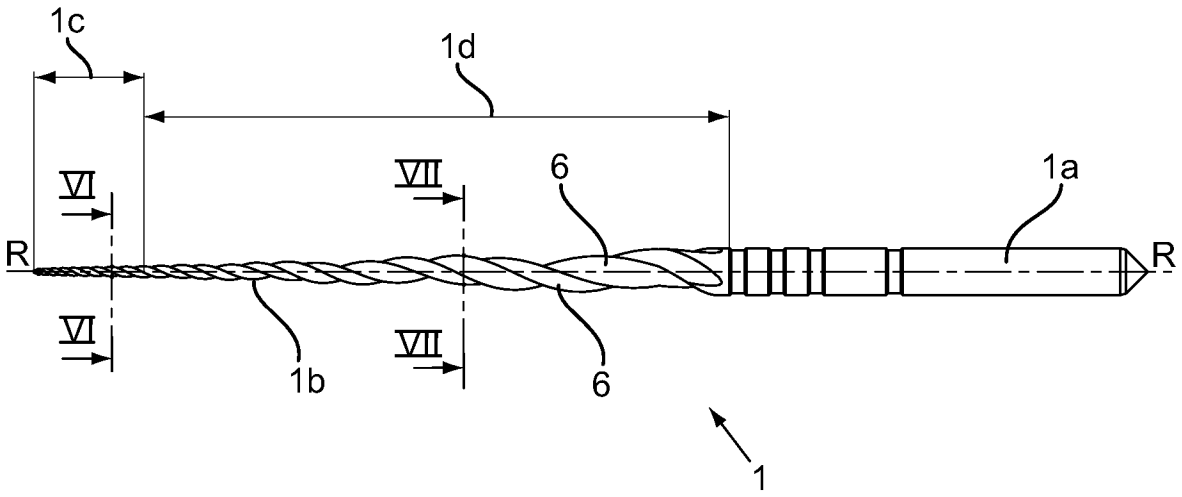

Fig.6

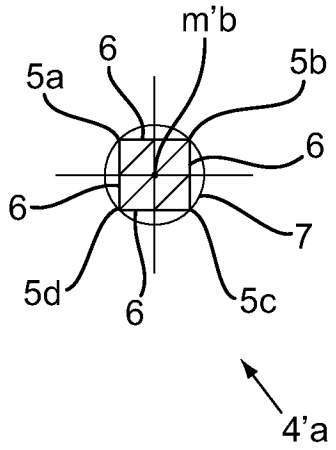

Fig.7

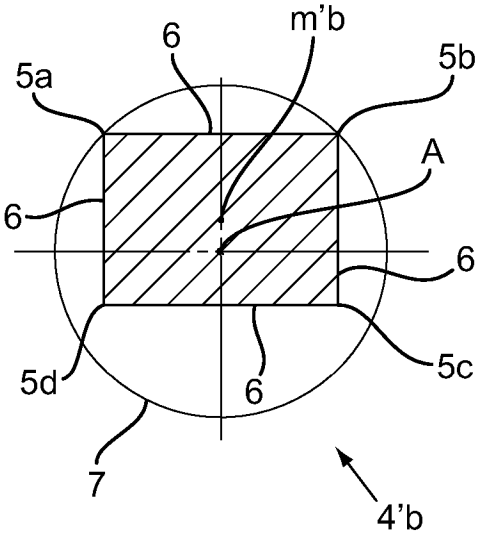

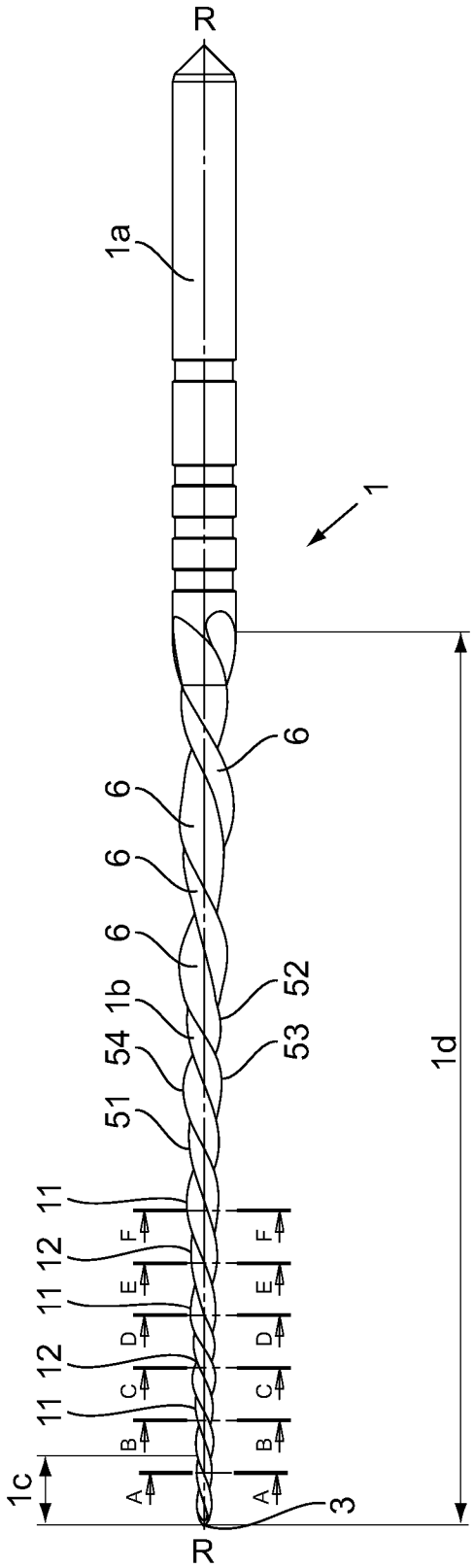

Fig.8

Fig.9

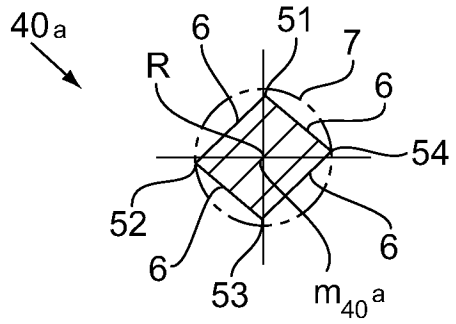

Fig.10

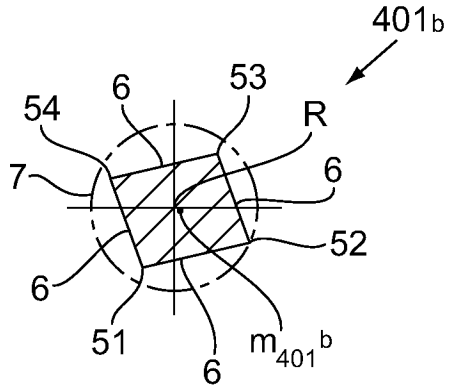

Fig.11

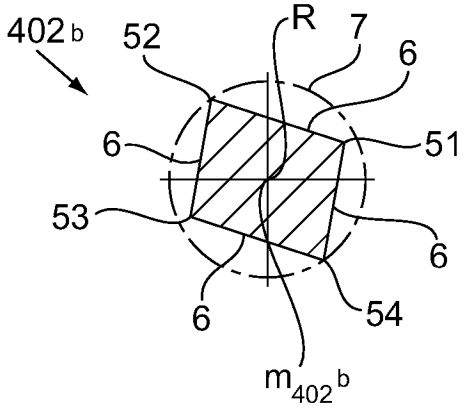

Fig.12

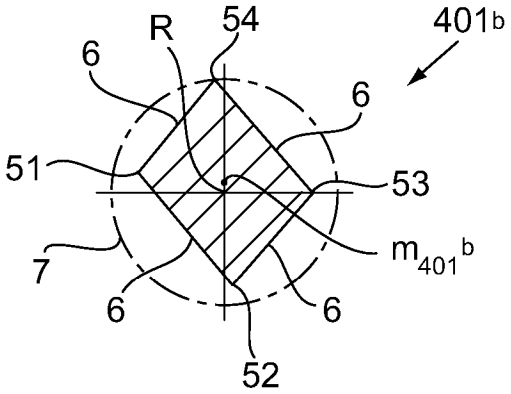

Fig.13

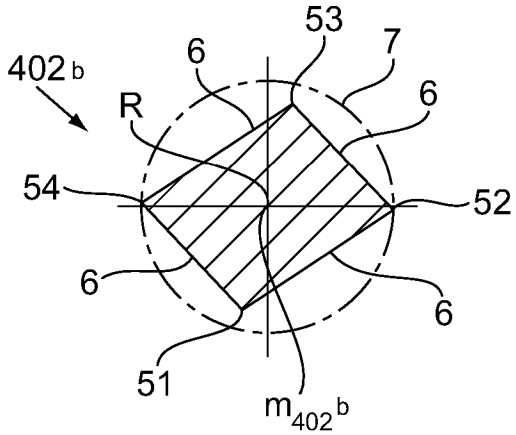

Fig.14

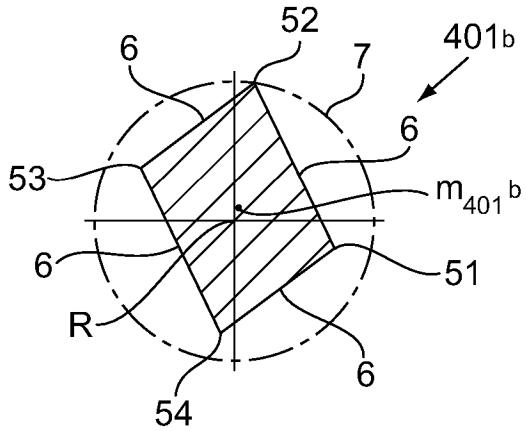

Electronic Patent Application Fee Transmittal

Application Number:	
Filing Date:	
Title of Invention:	INSTRUMENT FOR DRILLING DENTAL ROOT CANALS
First Named Inventor/Applicant Name:	Gilbert ROTA
Filer:	Benoit Castel/Nadine Beasley
Attorney Docket Number:	5001-1489

Filed as Large Entity

Filing Fees for U.S. National Stage under 35 USC 371

Description	Fee Code	Quantity	Amount	Sub-Total in USD($)
Basic Filing:				
National Stage Fee	1631	1	280	280
Natl Stage Search Fee - Report provided	1642	1	480	480
National Stage Exam - all other cases	1633	1	720	720
Pages:				
Claims:				
Miscellaneous-Filing:				
Oath/Decl > 30 Mos From 371 commencement	1617	1	140	140
Petition:				

Description	Fee Code	Quantity	Amount	Sub-Total in USD($)
Patent-Appeals-and-Interference:				
Post-Allowance-and-Post-Issuance:				
Extension-of-Time:				
Miscellaneous:				
			Total in USD ($)	**1620**

Electronic Acknowledgement Receipt

EFS ID:	22597782
Application Number:	14651672
International Application Number:	PCT/IB2013/001191
Confirmation Number:	7424
Title of Invention:	INSTRUMENT FOR DRILLING DENTAL ROOT CANALS
First Named Inventor/Applicant Name:	Gilbert ROTA
Customer Number:	466
Filer:	Benoit Castel
Filer Authorized By:	
Attorney Docket Number:	5001-1489
Receipt Date:	12-JUN-2015
Filing Date:	
Time Stamp:	07:46:08
Application Type:	U.S. National Stage under 35 USC 371

Payment information:

Submitted with Payment	no

File Listing:

Document Number	Document Description	File Name	File Size(Bytes)/ Message Digest	Multi Part /.zip	Pages (if appl.)
1	Transmittal of New Application	1390.pdf	34441 119234c6d6929c6b3720841a7747e54de0b1e610	no	1

Warnings:

Information:

2		SPEC.pdf	73693 7223167b6d5c9422ff786e2c17d96cc939da46d6	yes	16
	Multipart Description/PDF files in .zip description				
	Document Description		**Start**	**End**	
	Specification		1	13	
	Claims		14	15	
	Abstract		16	16	
Warnings:					
Information:					
3	Application Data Sheet	ADS.pdf	1561480 51f0718d98ae932fb801415f2d26d714cc723a7d	no	7
Warnings:					
Information:					
4	Information Disclosure Statement (IDS) Form (SB08)	IDS.pdf	612577 b4edf339b695f8246c821d4f80823296a70beb7a	no	4
Warnings:					
Information:					
5	Other Reference-Patent/App/Search documents	ISR.pdf	73749 4cd8fa141f1bf990a7da729db0a220b3c3c265fe	no	3
Warnings:					
Information:					
6	Foreign Reference	REF_DE102006007316A1.pdf	401670 6ad5f1166853c3097daf93e11cf7425d37da91bb	no	13
Warnings:					
Information:					
7	Foreign Reference	REF_EP1361831A1.pdf	76151 ac237fd81b8f63fcc71d86877acb42991fd8f90a	no	3
Warnings:					
Information:					
8		PRELIM.pdf	37093 a4f34acd82d6c072cbc478076a104588a6a657f6	yes	10
	Multipart Description/PDF files in .zip description				
	Document Description		**Start**	**End**	

	Preliminary Amendment		1	1	
	Specification		2	2	
	Claims		3	7	
	Applicant Arguments/Remarks Made in an Amendment		8	9	
	Abstract		10	10	
Warnings:					
Information:					
9	Documents submitted with 371 Applications	WIPO_Cover_Page_Only.pdf	75767 a157e84b644dbba32e6e890f8354d94b368721fa	no	1
Warnings:					
Information:					
10	Documents submitted with 371 Applications	PCT_IB-308.pdf	69323 2c4dd726ffbc9ae022d7070d15b0c6acd477b342	no	1
Warnings:					
Information:					
11	Drawings-other than black and white line drawings	DWGS.pdf	44619 fbdc1bdd934ce2e444e1100ce29f6482adc787f6	no	4
Warnings:					
Information:					
12	Fee Worksheet (SB06)	fee-info.pdf	36983 62e0c9f042cd98eb8ea1def80567864e5f53ddce	no	2
Warnings:					
Information:					
		Total Files Size (in bytes):	3097546		

This Acknowledgement Receipt evidences receipt on the noted date by the USPTO of the indicated documents, characterized by the applicant, and including page counts, where applicable. It serves as evidence of receipt similar to a Post Card, as described in MPEP 503.

New Applications Under 35 U.S.C. 111
If a new application is being filed and the application includes the necessary components for a filing date (see 37 CFR 1.53(b)-(d) and MPEP 506), a Filing Receipt (37 CFR 1.54) will be issued in due course and the date shown on this Acknowledgement Receipt will establish the filing date of the application.

National Stage of an International Application under 35 U.S.C. 371
If a timely submission to enter the national stage of an international application is compliant with the conditions of 35 U.S.C. 371 and other applicable requirements a Form PCT/DO/EO/903 indicating acceptance of the application as a national stage submission under 35 U.S.C. 371 will be issued in addition to the Filing Receipt, in due course.

New International Application Filed with the USPTO as a Receiving Office
If a new international application is being filed and the international application includes the necessary components for an international filing date (see PCT Article 11 and MPEP 1810), a Notification of the International Application Number and of the International Filing Date (Form PCT/RO/105) will be issued in due course, subject to prescriptions concerning national security, and the date shown on this Acknowledgement Receipt will establish the international filing date of the application.

SCORE Placeholder Sheet for IFW Content

Application Number: 14651672 Document Date: 06/12/2015

The presence of this form in the IFW record indicates that the following document type was received in electronic format on the date identified above. This content is stored in the SCORE database.

Since this was an electronic submission, there is no physical artifact folder, no artifact folder is recorded in PALM, and no paper documents or physical media exist. The TIFF images in the IFW record were created from the original documents that are stored in SCORE.

- Drawing

At the time of document entry (noted above):

- USPTO employees may access SCORE content via eDAN using the Supplemental Content tab, or via the SCORE web page.
- External customers may access SCORE content via PAIR using the Supplemental Content tab.

Document code: WFEE

United States Patent and Trademark Office
Sales Receipt for Accounting Date: 08/20/2015

FYOUNG ADJ #00000003 Mailroom Dt: 06/12/2015
Seq No: 20738 Sales Acctg Dt: 06/12/2015 14651677
04 FC : 1617 -140.00 OP

UNITED STATES PATENT AND TRADEMARK OFFICE

Commissioner for Patents
United States Patent and Trademark Office
P.O. Box 1450
Alexandria, VA 22313-1450
www.uspto.gov

MAILED

JUL 10 2015

PCT LEGAL ADMINISTRATION

YOUNG & THOMPSON
209 Madison Street, Suite 500
Alexandria VA 22314

In re Application of :
MAILLEFER INSTRUMENTS HOLDING SARL
U.S. Application No.: 14/651,672 (14/651,677)
PCT No.: PCT/IB2013/001191
Int. Filing Date: 07 June 2013
Attorney Docket No.: 5001-1489
For: INSTRUMENT FOR DRILLING DENTAL ROOT CANALS

DECISION

These applications are before the International Patent Legal Administration for issues arising under 35 U.S.C. 371 and 37 CFR 1.495.

On 12 June 2015, applicant electronically filed an application requesting entry in the U.S. National stage of international application PCT/IB2013/001191. These papers included the payment of the U.S. Basic National fee. These papers were assigned serial number 14/651,677. Additionally, applicant electronically filed an additional set of papers which were assigned serial number 14/651,672.

Applicant is advised that there can only be one U.S. national stage application for a given PCT international application. Thus, the filing of two national stage applications is improper. A review of the fee payment in application 14/651,677 finds that it was provided prior to the expiration of thirty months from the earliest claimed priority date.

As such, the initially filed papers assigned serial number 14/651,672 will be moved to application 14/651,677. Application 14/651,677 will continue to be the U.S. National stage entry of international application PCT/IB2013/001191.

Application 14/651,672 has been discontinued.

As detailed above, application 14/651,677 has been established as the U.S. National stage entry of international application PCT/IB2013/001191. This application is being returned to the United States Designated/Elected Office for processing in accordance with this decision.

/AnthonySmith/
Anthony Smith
Attorney Advisor
Office of PCT Legal Administration
Tel: (571) 272-3294

Y&T Form C (form PTO/AIA/82B equivalent)
Attorney Docket No. 5001-1489

POWER OF ATTORNEY BY APPLICANT

I hereby revoke all previous powers of attorney given in the application identified in the attached transmittal letter.

I hereby appoint Practitioner(s) associated with the following Customer Number as my/our attorney(s) or agent(s), and to transact all business in the United States Patent and Trademark Office connected therewith for the application referenced in the attached transmittal letter (form PTO/AIA/82A or equivalent):

Customer Number
00466

I furthermore authorize Young & Thompson and Practitioner(s) associated with Customer Number 00466 to attach a photocopy of this form to a form PTO/AIA/82A or equivalent that references an application in which Practitioner(s) associated with Customer Number 00466 have been granted Power of Attorney as described herein.

I furthermore authorize Young & Thompson and Practitioner(s) associated with Customer Number 00466 to accept and follow instructions from as to any action to be taken in the U.S. Patent & Trademark Office regarding this application without direct communication between Young & Thompson or Practitioner(s) associated with Customer Number 00466 and the Applicant herein named. In the event of a change in the persons from whom instructions may be taken, Young &Thompson and Practitioner(s) associated with Customer Number 00466 will be so notified by the Applicant named herein.

Please recognize or change the correspondence address for the above-identified patent to:

c/o YOUNG & THOMPSON
209 Madison Street, Suite 500
Alexandria, VA 22314

Customer Number
00466

Address all telephone calls to Young & Thompson at 703-521-2297. Facsimile: 703-685-0573.

I am the Applicant:

- ☐ Inventor or Joint Inventor
- ☐ Legal Representative of a Deceased or Legally Incapacitated Inventor
- ☒ Assignee or Person to Whom the Inventor is Under an Obligation to Assign
- ☐ Person Who Otherwise Shows Sufficient *Proprietary* Interest (*e.g.*, a petition under 37 CFR 1.46(b)(2) was granted in the application or is concurrently being filed with this document)

SIGNATURE of Applicant for Patent

Signature		Date	July 9, 2015
Name	Dominique LEGROS		
Title and Company	Maillefer Instruments Holding Sàrl Director		

NOTE: Signature - This form must be signed by the applicant or applicant's representative in accordance with 37 CFR 1.33. See 37 CFR 1.4 for signature requirements and certifications.

☐ Total of form(s) is submitted.

Electronic Acknowledgement Receipt

EFS ID:	23063136
Application Number:	14651677
International Application Number:	
Confirmation Number:	4162
Title of Invention:	INSTRUMENT FOR DRILLING DENTAL ROOT CANALS
First Named Inventor/Applicant Name:	Gilbert ROTA
Customer Number:	466
Filer:	Eric Jensen/Debbie Labriny
Filer Authorized By:	Eric Jensen
Attorney Docket Number:	5001-1489
Receipt Date:	30-JUL-2015
Filing Date:	
Time Stamp:	16:37:24
Application Type:	U.S. National Stage under 35 USC 371

Payment information:

Submitted with Payment	no

File Listing:

Document Number	Document Description	File Name	File Size(Bytes)/ Message Digest	Multi Part /.zip	Pages (if appl.)
1	Miscellaneous Incoming Letter	SECOND_SUBM.pdf	105667 668f9e11df0972bd7db1332cbaaa4871d622e293	no	1

Warnings:

Information:

2	Oath or Declaration filed	DEC-ASSMT-.pdf	502076 402e73b02a2ae746f46f86b8c1cfb558811f8025	no	1
Warnings:					
Information:					
3	Power of Attorney	POA--.pdf	139930 61ce350c072ddd4dd25044da9f6f5b4bea104497	no	1
Warnings:					
Information:					
			Total Files Size (in bytes):	747673	

This Acknowledgement Receipt evidences receipt on the noted date by the USPTO of the indicated documents, characterized by the applicant, and including page counts, where applicable. It serves as evidence of receipt similar to a Post Card, as described in MPEP 503.

<u>New Applications Under 35 U.S.C. 111</u>
If a new application is being filed and the application includes the necessary components for a filing date (see 37 CFR 1.53(b)-(d) and MPEP 506), a Filing Receipt (37 CFR 1.54) will be issued in due course and the date shown on this Acknowledgement Receipt will establish the filing date of the application.

<u>National Stage of an International Application under 35 U.S.C. 371</u>
If a timely submission to enter the national stage of an international application is compliant with the conditions of 35 U.S.C. 371 and other applicable requirements a Form PCT/DO/EO/903 indicating acceptance of the application as a national stage submission under 35 U.S.C. 371 will be issued in addition to the Filing Receipt, in due course.

<u>New International Application Filed with the USPTO as a Receiving Office</u>
If a new international application is being filed and the international application includes the necessary components for an international filing date (see PCT Article 11 and MPEP 1810), a Notification of the International Application Number and of the International Filing Date (Form PCT/RO/105) will be issued in due course, subject to prescriptions concerning national security, and the date shown on this Acknowledgement Receipt will establish the international filing date of the application.

TRANSMITTAL LETTER TO THE UNITED STATES DESIGNATED/ELECTED OFFICE (DO/EO/US) CONCERNING A FILING UNDER 35 U.S.C. 371		Attorney Docket No. **5001-1489** U.S. Application No. **14/651,677**
INTERNATIONAL APPLN. NO. **PCT/IB2013/001191**	INTERNATIONAL FILING DATE **June 7, 2013**	PRIORITY DATE CLAIMED **January 30, 2013**

TITLE OF INVENTION: **INSTRUMENT FOR DRILLING DENTAL ROOT CANALS**

APPLICANT(S) FOR DO/EO/US: **1) Gilbert ROTA; 2) Paul-Henri VALLOTTON;**

Applicant herewith submits to the United States Designated Elected Office (DO/EO/US) the following items and other information:

1. ☐ This is a **FIRST** submission of items concerning a filing under 35 U.S.C. 371.
2. ☒ This is a **SECOND** or **SUBSEQUENT** submission of items concerning a filing under 35 U.S.C. 371.
3. ☒ This is an express request to begin national examination procedures (35 U.S.C. 371(f)).
4. ☒ The US has been elected (Article 31).
5. ☐ A copy of the International Application as filed (35 U.S.C. 371 (c)(2))
   a. ☐ is attached hereto (required only if not communicated by the International Bureau).
   b. ☐ has been communicated by the International Bureau. See attached PCT/IB/308 (Second Notice).
   c. ☐ is not required, as the application was filed in the United States Receiving Office (RO/US)
6. ☐ An English language translation of the International Application as filed (35 U.S.C. 371 (c)(2))
   a. ☐ is attached hereto.
   b. ☐ has been previously submitted under 35 U.S.C. 154(d)(4).
7. ☒ An oath or declaration of the inventor(s) (35 U.S.C. 371(c)(4)).
8. ☐ A Declaration of Inventorship for purposes of U.S.A. designation pursuant to rule 4.17(iv).
9. ☐ **Applicant claims small entity status. See 37 CFR 1.27.**
10. ☐ Information Disclosure Statement (IDS) w/PTO-1449 - ☐ Copy of IDS citations. - ☐ PCT/ISA/210 International Search Report included.
11. ☐ Assignment Papers filed via EFS.
12. ☐ A preliminary amendment.
13. ☐ An Application Data Sheet under 37 C.F.R. 1.76.
14. ☐ Abstract.
15. ☐ A substitute specification.
16. ☐ A computer-readable form of the sequence listing in accordance with PCT Rule 13*ter*.2 and 37 CFR 1.821 - 1.825.
17. ☒ Other items or information: **Power of Attorney**
18. ☐ The required filing fees are being paid online simultaneously herewith by credit card.
19. ☒ The Director is hereby authorized in this, concurrent, and future submissions, to charge payment or credit any overpayment to Deposit Account No. 25-0120 for any additional fee required under 37 C.F.R. §§ 1.16, 1.17, or 1.492.

SEND ALL CORRESPONDENCE TO:
YOUNG & THOMPSON
209 Madison Street
Suite 500
Alexandria, VA 22314
Telephone: (703) 521-2297
Facsimile: (703) 685-0573

Young &Thompson's Customer No. **00466**

BC/**dll**

/Benoît Castel/
Signature

Benoit Castel, Reg. No. 35,041
Name, Registration Number

30 July 2015
Date

Y&T Form B (includes equivalent to form PTO/AIA/01)
Attorney Docket No. 5001-1489

ASSIGNMENT AND INVENTOR'S DECLARATION

WHEREAS I/we, the undersigned inventor(s), hereafter also referred to as "assignor(s)", have invented certain new and useful improvements described in the application identified below; and

WHEREAS, Maillefer Instruments Holding Sàrl, hereinafter referred to as "assignee(s)", whose address is Chemin du Verger 3 - 1338 Ballaigues / Switzerland, is desirous of acquiring the entire right, title and interest in and to the application and invention, and to any United States patents to be obtained therefor;

NOW, THEREFORE, for valuable consideration, the receipt and sufficiency of which is hereby acknowledged, I/we, the above-named assignor(s), hereby sell, assign and transfer to the above named assignee(s), its successors and assigns, the entire right, title and interest in the application and the invention disclosed therein for the United States of America, including all divisions, and continuations thereof, and all Letters Patent of the United States that may be granted thereon, and all reissues thereof, including any right to bring or maintain an action for infringement under the provisional rights granted pursuant to Title 35, Section 154 of the United States Code or any other cause of action for acts which would constitute infringement occurring prior to this assignment, and including the right to claim priority under the International Convention of Paris (1883), as amended, of or in any corresponding foreign patent application, and I/we request the Director of the U.S. Patent and Trademark Office to issue any Letters Patent granted upon the invention set forth in the application to the assignee(s), its successors and assigns.

As a below named inventor, I hereby declare that:

This assignment and declaration is directed to:

- ☐ The attached application, or
- ☐ United States Application or PCT International Application Number _____ filed on _____ (Confirmation No._____).

The application is entitled: INSTRUMENT FOR DRILLING DENTAL ROOT CANALS

The above-identified application was made or was authorized to be made by me.

I believe that I am the original inventor or an original joint inventor of a claimed invention in the application.

I hereby acknowledge that any willful false statement made in this assignment with declaration is punishable under 18 USC 1001 by fine or imprisonment of not more than five (5) years, or both.

Given Name(s) Gilbert	Family Name/Surname(s) ROTA
Inventor's Signature:	Date 26.05.2015
Given Name(s) Paul-Henri	Family Name/Surname(s) VALLOTTON
Inventor's Signature: PH Vallotton	Date 01.07.2015
Given Name(s)	Family Name/Surname(s)
Inventor's Signature:	Date
Given Name(s)	Family Name/Surname(s)
Inventor's Signature:	Date

UNITED STATES PATENT AND TRADEMARK OFFICE

UNITED STATES DEPARTMENT OF COMMERCE
United States Patent and Trademark Office
Address: COMMISSIONER FOR PATENTS
P.O. Box 1450
Alexandria, Virginia 22313-1450
www.uspto.gov

APPLICATION NUMBER	FILING or 371(c) DATE	GRP ART UNIT	FIL FEE REC'D	ATTY.DOCKET.NO	TOT CLAIMS	IND CLAIMS
14/651,677	06/12/2015		1620	5001-1489	10	1

CONFIRMATION NO. 4162

466
YOUNG & THOMPSON
209 Madison Street
Suite 500
Alexandria, VA 22314

FILING RECEIPT

OC000000078843991

Date Mailed: 08/04/2015

Receipt is acknowledged of this non-provisional patent application. The application will be taken up for examination in due course. Applicant will be notified as to the results of the examination. Any correspondence concerning the application must include the following identification information: the U.S. APPLICATION NUMBER, FILING DATE, NAME OF APPLICANT, and TITLE OF INVENTION. Fees transmitted by check or draft are subject to collection. Please verify the accuracy of the data presented on this receipt. **If an error is noted on this Filing Receipt, please submit a written request for a Filing Receipt Correction. Please provide a copy of this Filing Receipt with the changes noted thereon. If you received a "Notice to File Missing Parts" for this application, please submit any corrections to this Filing Receipt with your reply to the Notice. When the USPTO processes the reply to the Notice, the USPTO will generate another Filing Receipt incorporating the requested corrections**

Inventor(s)

Gilbert ROTA, Vaux et Chantegrue, FRANCE;
Paul-Henri VALLOTTON, Pampigny, SWITZERLAND;

Applicant(s)

MAILLEFER INSTRUMENTS HOLDING SARL, Ballaigues, SWITZERLAND;

Power of Attorney: The patent practitioners associated with Customer Number 466

Domestic Priority data as claimed by applicant

This application is a 371 of PCT/IB2013/001191 06/07/2013

Foreign Applications (You may be eligible to benefit from the **Patent Prosecution Highway** program at the USPTO. Please see http://www.uspto.gov for more information.)
INTERNATIONAL BUREAU OF THE WORLD INTELL PCT/IB2013/000108 01/30/2013 No Access Code Provided

Permission to Access - A proper **Authorization to Permit Access to Application by Participating Offices** (PTO/SB/39 or its equivalent) has been received by the USPTO.

If Required, Foreign Filing License Granted: 08/03/2015

The country code and number of your priority application, to be used for filing abroad under the Paris Convention, is **US 14/651,677**

Projected Publication Date: 11/12/2015

Non-Publication Request: No

Early Publication Request: No

Title

INSTRUMENT FOR DRILLING DENTAL ROOT CANALS

Preliminary Class

Statement under 37 CFR 1.55 or 1.78 for AIA (First Inventor to File) Transition Applications: No

PROTECTING YOUR INVENTION OUTSIDE THE UNITED STATES

Since the rights granted by a U.S. patent extend only throughout the territory of the United States and have no effect in a foreign country, an inventor who wishes patent protection in another country must apply for a patent in a specific country or in regional patent offices. Applicants may wish to consider the filing of an international application under the Patent Cooperation Treaty (PCT). An international (PCT) application generally has the same effect as a regular national patent application in each PCT-member country. The PCT process **simplifies** the filing of patent applications on the same invention in member countries, but **does not result** in a grant of "an international patent" and does not eliminate the need of applicants to file additional documents and fees in countries where patent protection is desired.

Almost every country has its own patent law, and a person desiring a patent in a particular country must make an application for patent in that country in accordance with its particular laws. Since the laws of many countries differ in various respects from the patent law of the United States, applicants are advised to seek guidance from specific foreign countries to ensure that patent rights are not lost prematurely.

Applicants also are advised that in the case of inventions made in the United States, the Director of the USPTO must issue a license before applicants can apply for a patent in a foreign country. The filing of a U.S. patent application serves as a request for a foreign filing license. The application's filing receipt contains further information and guidance as to the status of applicant's license for foreign filing.

Applicants may wish to consult the USPTO booklet, "General Information Concerning Patents" (specifically, the section entitled "Treaties and Foreign Patents") for more information on timeframes and deadlines for filing foreign patent applications. The guide is available either by contacting the USPTO Contact Center at 800-786-9199, or it can be viewed on the USPTO website at http://www.uspto.gov/web/offices/pac/doc/general/index.html.

For information on preventing theft of your intellectual property (patents, trademarks and copyrights), you may wish to consult the U.S. Government website, http://www.stopfakes.gov. Part of a Department of Commerce initiative, this website includes self-help "toolkits" giving innovators guidance on how to protect intellectual property in specific countries such as China, Korea and Mexico. For questions regarding patent enforcement issues, applicants may call the U.S. Government hotline at 1-866-999-HALT (1-866-999-4258).

LICENSE FOR FOREIGN FILING UNDER

Title 35, United States Code, Section 184

Title 37, Code of Federal Regulations, 5.11 & 5.15

GRANTED

The applicant has been granted a license under 35 U.S.C. 184, if the phrase "IF REQUIRED, FOREIGN FILING LICENSE GRANTED" followed by a date appears on this form. Such licenses are issued in all applications where

the conditions for issuance of a license have been met, regardless of whether or not a license may be required as set forth in 37 CFR 5.15. The scope and limitations of this license are set forth in 37 CFR 5.15(a) unless an earlier license has been issued under 37 CFR 5.15(b). The license is subject to revocation upon written notification. The date indicated is the effective date of the license, unless an earlier license of similar scope has been granted under 37 CFR 5.13 or 5.14.

This license is to be retained by the licensee and may be used at any time on or after the effective date thereof unless it is revoked. This license is automatically transferred to any related applications(s) filed under 37 CFR 1.53(d). This license is not retroactive.

The grant of a license does not in any way lessen the responsibility of a licensee for the security of the subject matter as imposed by any Government contract or the provisions of existing laws relating to espionage and the national security or the export of technical data. Licensees should apprise themselves of current regulations especially with respect to certain countries, of other agencies, particularly the Office of Defense Trade Controls, Department of State (with respect to Arms, Munitions and Implements of War (22 CFR 121-128)); the Bureau of Industry and Security, Department of Commerce (15 CFR parts 730-774); the Office of Foreign AssetsControl, Department of Treasury (31 CFR Parts 500+) and the Department of Energy.

NOT GRANTED

No license under 35 U.S.C. 184 has been granted at this time, if the phrase "IF REQUIRED, FOREIGN FILING LICENSE GRANTED" DOES NOT appear on this form. Applicant may still petition for a license under 37 CFR 5.12, if a license is desired before the expiration of 6 months from the filing date of the application. If 6 months has lapsed from the filing date of this application and the licensee has not received any indication of a secrecy order under 35 U.S.C. 181, the licensee may foreign file the application pursuant to 37 CFR 5.15(b).

SelectUSA

The United States represents the largest, most dynamic marketplace in the world and is an unparalleled location for business investment, innovation, and commercialization of new technologies. The U.S. offers tremendous resources and advantages for those who invest and manufacture goods here. Through SelectUSA, our nation works to promote and facilitate business investment. SelectUSA provides information assistance to the international investor community; serves as an ombudsman for existing and potential investors; advocates on behalf of U.S. cities, states, and regions competing for global investment; and counsels U.S. economic development organizations on investment attraction best practices. To learn more about why the United States is the best country in the world to develop technology, manufacture products, deliver services, and grow your business, visit http://www.SelectUSA.gov or call +1-202-482-6800.

MULTIPLE DEPENDENT CLAIM FEE CALCULATION SHEET

Substitute for Form PTO-1360
(For use with Form PTO/SB/06)

Application Number: 14651677

Filing Date:

Applicant(s): Gilbert ROTA

* May be used for additional claims or amendments

CLAIMS	AS FILED		AFTER FIRST AMENDMENT		AFTER SECOND AMENDMENT	
	Indep	Depend	Indep	Depend	Indep	Depend
1	1		1			
2		1		1		
3		1		1		
4		2		1		
5		1		1		
6		1		1		
7		(1)		1		
8		(1)		1		
9		(1)		1		
10				1		
11						
12						
13						
14						
15						
16						
17						
18						
19						
20						
21						
22						
23						
24						
25						
26						
27						
28						
29						
30						
31						
32						
33						
34						
35						
36						
37						
38						
39						
40						
41						
42						
43						
44						
45						
46						
47						
48						
49						
50						
Total Indep	1		1		0	
Total Depend	9		9		0	
Total Claims	10		10		0	

	*		*		*	
	Indep	Depend	Indep	Depend	Indep	Depend
51						
52						
53						
54						
55						
56						
57						
58						
59						
60						
61						
62						
63						
64						
65						
66						
67						
68						
69						
70						
71						
72						
73						
74						
75						
76						
77						
78						
79						
80						
81						
82						
83						
84						
85						
86						
87						
88						
89						
90						
91						
92						
93						
94						
95						
96						
97						
98						
99						
100						

UNITED STATES PATENT AND TRADEMARK OFFICE

UNITED STATES DEPARTMENT OF COMMERCE
United States Patent and Trademark Office
Address: COMMISSIONER FOR PATENTS
P.O. Box 1450
Alexandria, Virginia 22313-1450
www.uspto.gov

U.S. APPLICATION NUMBER NO.	FIRST NAMED INVENTOR	ATTY. DOCKET NO.
14/651,677	Gilbert ROTA	5001-1489

466
YOUNG & THOMPSON
209 Madison Street
Suite 500
Alexandria, VA 22314

INTERNATIONAL APPLICATION NO.	
PCT/IB2013/001191	
I.A. FILING DATE	PRIORITY DATE
06/07/2013	01/30/2013

CONFIRMATION NO. 4162
371 ACCEPTANCE LETTER

OC000000076645992

Date Mailed: 08/04/2015

NOTICE OF ACCEPTANCE OF APPLICATION UNDER 35 U.S.C 371 AND 37 CFR 1.495

The applicant is hereby advised that the United States Patent and Trademark Office, in its capacity as a Designated / Elected Office (37 CFR 1.495), has ACCEPTED the above identified international application for national patentability examination in the United States Patent and Trademark Office.

The United States Application Number assigned to the application is shown above. A Filing Receipt will be issued for the present application in due course. **THE DATE APPEARING ON THE FILING RECEIPT AS THE "FILING DATE or 371(c) DATE" IS THE DATE ON WHICH THE LAST OF THE 35 U.S.C. 371 (c)(1) and (c)(2) REQUIREMENTS HAS BEEN RECEIVED IN THE OFFICE. THIS DATE IS SHOWN BELOW.** The filing date of the above identified application is the international filing date of the international application (Article 11(3) and 35 U.S.C. 363)

06/12/2015
DATE OF RECEIPT OF 35 U.S.C.
371(c)(1) and (c)(2) REQUIREMENTS

The following items have been received:

- Copy of the International Application filed on 06/12/2015
- English Translation of the IA filed on 06/12/2015
- Copy of the International Search Report filed on 06/12/2015
- Preliminary Amendments filed on 06/12/2015
- Information Disclosure Statements filed on 06/12/2015
- Inventor's Oath or Declaration filed on 07/30/2015
- Request for Immediate Examination filed on 06/12/2015
- U.S. Basic National Fees filed on 06/12/2015
- Priority Documents filed on 06/12/2015
- Power of Attorney filed on 07/30/2015
- Authorization to Permit Access filed on 06/12/2015
- Application Data Sheet (37 CFR 1.76) filed on 06/12/2015

Applicant is reminded that any communications to the United States Patent and Trademark Office must be mailed to the address given in the heading and include the U.S. application no. shown above (37 CFR 1.5)

FRANCINE YOUNG

Telephone: (703) 756-1462

PATENT APPLICATION FEE DETERMINATION RECORD

Substitute for Form PTO-875

Application or Docket Number
14/651,677

APPLICATION AS FILED - PART I

FOR	(Column 1) NUMBER FILED	(Column 2) NUMBER EXTRA	SMALL ENTITY RATE($)	SMALL ENTITY FEE($)	OR	OTHER THAN SMALL ENTITY RATE($)	OTHER THAN SMALL ENTITY FEE($)
BASIC FEE (37 CFR 1.16(a), (b), or (c))	N/A	N/A	N/A			N/A	280
SEARCH FEE (37 CFR 1.16(k), (i), or (m))	N/A	N/A	N/A			N/A	480
EXAMINATION FEE (37 CFR 1.16(o), (p), or (q))	N/A	N/A	N/A			N/A	720
TOTAL CLAIMS (37 CFR 1.16(i))	10 minus 20 =	*			OR	x 80 =	0.00
INDEPENDENT CLAIMS (37 CFR 1.16(h))	1 minus 3 =	*				x 420 =	0.00
APPLICATION SIZE FEE (37 CFR 1.16(s))	If the specification and drawings exceed 100 sheets of paper, the application size fee due is $310 ($155 for small entity) for each additional 50 sheets or fraction thereof. See 35 U.S.C. 41(a)(1)(G) and 37 CFR 1.16(s).						0.00
MULTIPLE DEPENDENT CLAIM PRESENT (37 CFR 1.16(j))							0.00
* If the difference in column 1 is less than zero, enter "0" in column 2.			TOTAL			TOTAL	1480

APPLICATION AS AMENDED - PART II

		(Column 1) CLAIMS REMAINING AFTER AMENDMENT		(Column 2) HIGHEST NUMBER PREVIOUSLY PAID FOR	(Column 3) PRESENT EXTRA	SMALL ENTITY RATE($)	SMALL ENTITY ADDITIONAL FEE($)	OR	OTHER THAN SMALL ENTITY RATE($)	OTHER THAN SMALL ENTITY ADDITIONAL FEE($)
AMENDMENT A	Total (37 CFR 1.16(i))	*	Minus	**	=	x =		OR	x =	
AMENDMENT A	Independent (37 CFR 1.16(h))	*	Minus	***	=	x =		OR	x =	
AMENDMENT A	Application Size Fee (37 CFR 1.16(s))									
AMENDMENT A	FIRST PRESENTATION OF MULTIPLE DEPENDENT CLAIM (37 CFR 1.16(j))							OR		
						TOTAL ADD'L FEE		OR	TOTAL ADD'L FEE	

		(Column 1) CLAIMS REMAINING AFTER AMENDMENT		(Column 2) HIGHEST NUMBER PREVIOUSLY PAID FOR	(Column 3) PRESENT EXTRA	SMALL ENTITY RATE($)	SMALL ENTITY ADDITIONAL FEE($)	OR	OTHER THAN SMALL ENTITY RATE($)	OTHER THAN SMALL ENTITY ADDITIONAL FEE($)
AMENDMENT B	Total (37 CFR 1.16(i))	*	Minus	**	=	x =		OR	x =	
AMENDMENT B	Independent (37 CFR 1.16(h))	*	Minus	***	=	x =		OR	x =	
AMENDMENT B	Application Size Fee (37 CFR 1.16(s))									
AMENDMENT B	FIRST PRESENTATION OF MULTIPLE DEPENDENT CLAIM (37 CFR 1.16(j))							OR		
						TOTAL ADD'L FEE		OR	TOTAL ADD'L FEE	

* If the entry in column 1 is less than the entry in column 2, write "0" in column 3.
** If the "Highest Number Previously Paid For" IN THIS SPACE is less than 20, enter "20".
*** If the "Highest Number Previously Paid For" IN THIS SPACE is less than 3, enter "3".
The "Highest Number Previously Paid For" (Total or Independent) is the highest found in the appropriate box in column 1.

Mail Stop: 16
5001-1489

IN THE U.S. PATENT AND TRADEMARK OFFICE

In re application of

Gilbert ROTA et al. Conf. 4162

Application No. 14/651,677 Group 3732

Filed June 12, 2015 Examiner Not Assigned Yet

INSTRUMENT FOR DRILLING DENTAL ROOT CANALS

REQUEST FOR REFUND

Assistant Commissioner for Patents August 14, 2015
P.O. Box 1450
Alexandria, VA 22313-1450

Sir:

The present application papers were filed on June 12, 2015, as a 35 USC 371 application. The filing fee included a credit card charge in the amount of $140.00 to cover the following fees:

the 37 CFR §1.492(h) surcharge of 140.00 under Fee Code 2051 for oath or declaration after 30 months from priority date.

However, the executed declaration was filed on July 30, 2015 (by the 30 months from priority date deadline of July 30, 2015).

Accordingly, it is respectfully requested that the 37 CFR §1.492(h) surcharge fee of 140.00 under fee code 2051, which was prepaid by mistake or in excess, be refunded pursuant to 37

CFR 1.26, in the form of a credit to counsel's Credit Card or Deposit Account No. 25-0120.

Respectfully submitted,

YOUNG & THOMPSON

/Benoît Castel/

Benoît Castel, Reg. No. 35,041
Customer No. 00466
209 Madison Street, Suite 500
Alexandria, VA 22314
Telephone (703) 521-2297
Facsimile (703) 685-0573
(703) 979-4709

BC/dll

Electronic Acknowledgement Receipt

EFS ID:	23214092
Application Number:	14651677
International Application Number:	
Confirmation Number:	4162
Title of Invention:	INSTRUMENT FOR DRILLING DENTAL ROOT CANALS
First Named Inventor/Applicant Name:	Gilbert ROTA
Customer Number:	466
Filer:	Eric Jensen/Debbie Labriny
Filer Authorized By:	Eric Jensen
Attorney Docket Number:	5001-1489
Receipt Date:	14-AUG-2015
Filing Date:	12-JUN-2015
Time Stamp:	15:21:17
Application Type:	U.S. National Stage under 35 USC 371

Payment information:

Submitted with Payment	no

File Listing:

Document Number	Document Description	File Name	File Size(Bytes)/ Message Digest	Multi Part /.zip	Pages (if appl.)
1	Refund Request	REQ-REFUND.pdf	53317 53e994ffb898bf1580677f01ea68a46d01d5fedc	no	2

Warnings:

Information:

Total Files Size (in bytes):	53317

This Acknowledgement Receipt evidences receipt on the noted date by the USPTO of the indicated documents, characterized by the applicant, and including page counts, where applicable. It serves as evidence of receipt similar to a Post Card, as described in MPEP 503.

New Applications Under 35 U.S.C. 111
If a new application is being filed and the application includes the necessary components for a filing date (see 37 CFR 1.53(b)-(d) and MPEP 506), a Filing Receipt (37 CFR 1.54) will be issued in due course and the date shown on this Acknowledgement Receipt will establish the filing date of the application.

National Stage of an International Application under 35 U.S.C. 371
If a timely submission to enter the national stage of an international application is compliant with the conditions of 35 U.S.C. 371 and other applicable requirements a Form PCT/DO/EO/903 indicating acceptance of the application as a national stage submission under 35 U.S.C. 371 will be issued in addition to the Filing Receipt, in due course.

New International Application Filed with the USPTO as a Receiving Office
If a new international application is being filed and the international application includes the necessary components for an international filing date (see PCT Article 11 and MPEP 1810), a Notification of the International Application Number and of the International Filing Date (Form PCT/RO/105) will be issued in due course, subject to prescriptions concerning national security, and the date shown on this Acknowledgement Receipt will establish the international filing date of the application.

Document code: WFEE

United States Patent and Trademark Office
Sales Receipt for Accounting Date: 08/20/2015

FYOUNG RF #30165587 Mailroom Dt: 08/20/2015 14651677

Credit Card Refund Total: $140.00

American Express XXXXXXXXXXXX3010

UNITED STATES PATENT AND TRADEMARK OFFICE

UNITED STATES DEPARTMENT OF COMMERCE
United States Patent and Trademark Office
Address: COMMISSIONER FOR PATENTS
P.O. Box 1450
Alexandria, Virginia 22313-1450
www.uspto.gov

APPLICATION NUMBER	FILING OR 371(C) DATE	FIRST NAMED APPLICANT	ATTY. DOCKET NO./TITLE
14/651,677	06/12/2015	Gilbert ROTA	5001-1489

CONFIRMATION NO. 4162

PUBLICATION NOTICE

OC000000078613154

466
YOUNG & THOMPSON
209 Madison Street
Suite 500
Alexandria, VA 22314

Title:INSTRUMENT FOR DRILLING DENTAL ROOT CANALS

Publication No.US-2015-0320517-A1
Publication Date:11/12/2015

NOTICE OF PUBLICATION OF APPLICATION

The above-identified application will be electronically published as a patent application publication pursuant to 37 CFR 1.211, et seq. The patent application publication number and publication date are set forth above.

The publication may be accessed through the USPTO's publically available Searchable Databases via the Internet at www.uspto.gov. The direct link to access the publication is currently http://www.uspto.gov/patft/.

The publication process established by the Office does not provide for mailing a copy of the publication to applicant. A copy of the publication may be obtained from the Office upon payment of the appropriate fee set forth in 37 CFR 1.19(a)(1). Orders for copies of patent application publications are handled by the USPTO's Office of Public Records. The Office of Public Records can be reached by telephone at (703) 308-9726 or (800) 972-6382, by facsimile at (703) 305-8759, by mail addressed to the United States Patent and Trademark Office, Office of Public Records, Alexandria, VA 22313-1450 or via the Internet.

In addition, information on the status of the application, including the mailing date of Office actions and the dates of receipt of correspondence filed in the Office, may also be accessed via the Internet through the Patent Electronic Business Center at www.uspto.gov using the public side of the Patent Application Information and Retrieval (PAIR) system. The direct link to access this status information is currently http://pair.uspto.gov/. Prior to publication, such status information is confidential and may only be obtained by applicant using the private side of PAIR.

Further assistance in electronically accessing the publication, or about PAIR, is available by calling the Patent Electronic Business Center at 1-866-217-9197.

Office of Data Managment, Application Assistance Unit (571) 272-4000, or (571) 272-4200, or 1-888-786-0101

UNITED STATES PATENT AND TRADEMARK OFFICE

UNITED STATES DEPARTMENT OF COMMERCE
United States Patent and Trademark Office
Address: COMMISSIONER FOR PATENTS
P.O. Box 1450
Alexandria, Virginia 22313-1450
www.uspto.gov

APPLICATION NO.	FILING DATE	FIRST NAMED INVENTOR	ATTORNEY DOCKET NO.	CONFIRMATION NO.
14/651,677	06/12/2015	Gilbert ROTA	5001-1489	4162

466 7590 08/11/2016
YOUNG & THOMPSON
209 Madison Street
Suite 500
Alexandria, VA 22314

EXAMINER
BERTRAM, ERIC D

ART UNIT	PAPER NUMBER
3766	

NOTIFICATION DATE	DELIVERY MODE
08/11/2016	ELECTRONIC

Please find below and/or attached an Office communication concerning this application or proceeding.

The time period for reply, if any, is set in the attached communication.

Notice of the Office communication was sent electronically on above-indicated "Notification Date" to the following e-mail address(es):

DocketingDept@young-thompson.com
yandtpair@firsttofile.com

Office Action Summary	Application No. 14/651,677	Applicant(s) ROTA ET AL.	
	Examiner Eric D. Bertram	Art Unit 3766	AIA (First Inventor to File) Status No

-- The MAILING DATE of this communication appears on the cover sheet with the correspondence address --

Period for Reply

A SHORTENED STATUTORY PERIOD FOR REPLY IS SET TO EXPIRE 3 MONTHS FROM THE MAILING DATE OF THIS COMMUNICATION.

- Extensions of time may be available under the provisions of 37 CFR 1.136(a). In no event, however, may a reply be timely filed after SIX (6) MONTHS from the mailing date of this communication.
- If NO period for reply is specified above, the maximum statutory period will apply and will expire SIX (6) MONTHS from the mailing date of this communication.
- Failure to reply within the set or extended period for reply will, by statute, cause the application to become ABANDONED (35 U.S.C. § 133). Any reply received by the Office later than three months after the mailing date of this communication, even if timely filed, may reduce any earned patent term adjustment. See 37 CFR 1.704(b).

Status

1)☒ Responsive to communication(s) filed on 6/12/2015.

☐ A declaration(s)/affidavit(s) under **37 CFR 1.130(b)** was/were filed on _____.

2a)☐ This action is **FINAL**. 2b)☒ This action is non-final.

3)☐ An election was made by the applicant in response to a restriction requirement set forth during the interview on _____; the restriction requirement and election have been incorporated into this action.

4)☐ Since this application is in condition for allowance except for formal matters, prosecution as to the merits is closed in accordance with the practice under *Ex parte Quayle*, 1935 C.D. 11, 453 O.G. 213.

Disposition of Claims*

5)☒ Claim(s) 1-10 is/are pending in the application.

5a) Of the above claim(s) _____ is/are withdrawn from consideration.

6)☐ Claim(s) _____ is/are allowed.

7)☒ Claim(s) 1-4 and 7-10 is/are rejected.

8)☐ Claim(s) 5 and 6 is/are objected to.

9)☐ Claim(s) _____ are subject to restriction and/or election requirement.

* If any claims have been determined allowable, you may be eligible to benefit from the **Patent Prosecution Highway** program at a participating intellectual property office for the corresponding application. For more information, please see http://www.uspto.gov/patents/init_events/pph/index.jsp or send an inquiry to PPHfeedback@uspto.gov.

Application Papers

10)☐ The specification is objected to by the Examiner.

11)☐ The drawing(s) filed on _____ is/are: a)☐ accepted or b)☐ objected to by the Examiner.

Applicant may not request that any objection to the drawing(s) be held in abeyance. See 37 CFR 1.85(a).

Replacement drawing sheet(s) including the correction is required if the drawing(s) is objected to. See 37 CFR 1.121(d).

Priority under 35 U.S.C. § 119

12)☐ Acknowledgment is made of a claim for foreign priority under 35 U.S.C. § 119(a)-(d) or (f).

Certified copies:

a)☐ All b)☐ Some** c)☐ None of the:

1.☐ Certified copies of the priority documents have been received.

2.☐ Certified copies of the priority documents have been received in Application No. _____.

3.☐ Copies of the certified copies of the priority documents have been received in this National Stage application from the International Bureau (PCT Rule 17.2(a)).

** See the attached detailed Office action for a list of the certified copies not received.

Attachment(s)

1) ☒ Notice of References Cited (PTO-892)

2) ☒ Information Disclosure Statement(s) (PTO/SB/08a and/or PTO/SB/08b) Paper No(s)/Mail Date 6/12/2015.

3) ☐ Interview Summary (PTO-413) Paper No(s)/Mail Date. _____ .

4) ☐ Other: _____.

1. The present application is being examined under the pre-AIA first to invent provisions.

DETAILED ACTION

Information Disclosure Statement

2. The information disclosure statement (IDS) submitted on 6/12/2015 was filed in compliance with the provisions of 37 CFR 1.97. Accordingly, the information disclosure statement is being considered by the examiner.

Claim Rejections - 35 USC § 102

3. In the event the determination of the status of the application as subject to AIA 35 U.S.C. 102 and 103 (or as subject to pre-AIA 35 U.S.C. 102 and 103) is incorrect, any correction of the statutory basis for the rejection will not be considered a new ground of rejection if the prior art relied upon, and the rationale supporting the rejection, would be the same under either status.

4. The following is a quotation of the appropriate paragraphs of pre-AIA 35 U.S.C. 102 that form the basis for the rejections under this section made in this Office action:

> A person shall be entitled to a patent unless –
>
> (b) the invention was patented or described in a printed publication in this or a foreign country or in public use or on sale in this country, more than one year prior to the date of application for patent in the United States.

5. Claim(s) 1-4, 7 and 10 are rejected under pre-AIA 35 U.S.C. 102(b) as being anticipated by McSpadden (US 2006/0265858).

6. Regarding claim 1, McSpadden discloses an instrument for boring dental root canals, including a threaded rod having, over at least a portion of its length, called the active part, a polygonal cross-section (see figure 3G) forming at least two cutting edges,

said active part ending with a tip ("proximal end 107") and being defined by a conical envelope, the longitudinal axis of which merges with the rotation axis (R) of the instrument, in which said active part comprises a first portion ("proximal end 107") extending from the tip ("proximal end 107") and a second portion extending after the first portion (end of the part referenced 107) toward the rear of the active part; any cross section of the first portion has a center of mass located on the rotation axis (R) and said at least two cutting edges (the part closest to the tip of part 107) defined by said cross-section are on the envelope; and at least one cross-section (see figure 3G) of the second portion has a center of mass offset with respect to the rotation axis (R), and at least one cutting edge (see figure 3G) defined by said cross-section is set back inside the envelope (see DI, paragraph [0037]; paragraph [0043]; paragraph [0044]; figure 3G).

7. Regarding claims 2-4, 7 and 10, these features are shown in figure 3G of McSpadden.

Claim Rejections - 35 USC § 103

8. The following is a quotation of pre-AIA 35 U.S.C. 103(a) which forms the basis for all obviousness rejections set forth in this Office action:

> (a) A patent may not be obtained though the invention is not identically disclosed or described as set forth in section 102, if the differences between the subject matter sought to be patented and the prior art are such that the subject matter as a whole would have been obvious at the time the invention was made to a person having ordinary skill in the art to which said subject matter pertains. Patentability shall not be negatived by the manner in which the invention was made.

9. The factual inquiries set forth in *Graham v. John Deere Co.*, 383 U.S. 1, 148 USPQ 459 (1966), that are applied for establishing a background for determining obviousness under pre-AIA 35 U.S.C. 103(a) are summarized as follows:

1. Determining the scope and contents of the prior art.

2. Ascertaining the differences between the prior art and the claims at issue.

3. Resolving the level of ordinary skill in the pertinent art.

4. Considering objective evidence present in the application indicating obviousness or nonobviousness.

10. This application currently names joint inventors. In considering patentability of the claims under pre-AIA 35 U.S.C. 103(a), the examiner presumes that the subject matter of the various claims was commonly owned at the time any inventions covered therein were made absent any evidence to the contrary. Applicant is advised of the obligation under 37 CFR 1.56 to point out the inventor and invention dates of each claim that was not commonly owned at the time a later invention was made in order for the examiner to consider the applicability of pre-AIA 35 U.S.C. 103(c) and potential pre-AIA 35 U.S.C. 102(e), (f) or (g) prior art under pre-AIA 35 U.S.C. 103(a).

11. Claims 8 and 9 are rejected under pre-AIA 35 U.S.C. 103(a) as being unpatentable over McSpadden.

12. Mcspadden, as described above, discloses the applicant's basic invention, but is silent as to the cross sections being square or rectangular, and the exact length of the first section. However, based on the applicant's specification, these appear to be design choices that do not affect the operation of the invention in any meaningful way. Therefore, it would have been obvious to one of ordinary skill in the art at the time of the applicant's invention to modify McSpadden to include square and/or rectangular cross sections and for the first section to have a length between 1 and 3 mm, as it has been held that, where the only difference between the prior art and the claims was a recitation

of relative dimensions of the claimed device and a device having the claimed relative dimensions would not perform differently than the prior art device, the claimed device was not patentably distinct from the prior art device (In *Gardner v. TEC Syst., Inc.*, 725 F.2d 1338, 220 USPQ 777 (Fed. Cir. 1984), *cert. denied,* 469 U.S. 830, 225 USPQ 232 (1984) and it has further been held that the configuration of a claimed invention is a matter of choice which a person of ordinary skill in the art would have found obvious absent persuasive evidence that the particular configuration of the claimed invention was significant (*In re Dailey,* 357 F.2d 669, 149 USPQ 47 (CCPA 1966).

Allowable Subject Matter

13. Claims 5 and 6 are objected to as being dependent upon a rejected base claim, but would be allowable if rewritten in independent form including all of the limitations of the base claim and any intervening claims.

Conclusion

Any inquiry concerning this communication or earlier communications from the examiner should be directed to Eric D. Bertram whose telephone number is (571)272-3446. The examiner can normally be reached on Monday-Friday from 10-5 EST.

If attempts to reach the examiner by telephone are unsuccessful, the examiner's supervisor, Carl H. Layno can be reached on 571-272-4949. The fax phone number for the organization where this application or proceeding is assigned is 571-273-8300.

Information regarding the status of an application may be obtained from the Patent Application Information Retrieval (PAIR) system. Status information for published applications may be obtained from either Private PAIR or Public PAIR. Status information for unpublished applications is available through Private PAIR only. For more information about the PAIR system, see http://pair-direct.uspto.gov. Should you have questions on access to the Private PAIR system, contact the Electronic Business Center (EBC) at 866-217-9197 (toll-free). If you would like assistance from a USPTO Customer Service Representative or access to the automated information system, call 800-786-9199 (IN USA OR CANADA) or 571-272-1000.

/Eric D. Bertram/
Primary Examiner, Art Unit 3766

Notice of References Cited	Application/Control No. 14/651,677	Applicant(s)/Patent Under Reexamination ROTA ET AL.	
	Examiner Eric D. Bertram	Art Unit 3766	Page 1 of 1

U.S. PATENT DOCUMENTS

*		Document Number Country Code-Number-Kind Code	Date MM-YYYY	Name	CPC Classification	US Classification
*	A	US-2006/0265858 A1	11-2006	McSpadden; John T.	A61C5/023	29/558
	B	US-				
	C	US-				
	D	US-				
	E	US-				
	F	US-				
	G	US-				
	H	US-				
	I	US-				
	J	US-				
	K	US-				
	L	US-				
	M	US-				

FOREIGN PATENT DOCUMENTS

*		Document Number Country Code-Number-Kind Code	Date MM-YYYY	Country	Name	CPC Classification
	N					
	O					
	P					
	Q					
	R					
	S					
	T					

NON-PATENT DOCUMENTS

*		Include as applicable: Author, Title Date, Publisher, Edition or Volume, Pertinent Pages)
	U	
	V	
	W	
	X	

*A copy of this reference is not being furnished with this Office action. (See MPEP § 707.05(a).)
Dates in MM-YYYY format are publication dates. Classifications may be US or foreign.

PTO/SB/08a (01-10)
Approved for use through 07/31/2012. OMB 0651-0031
U.S. Patent and Trademark Office; U.S. DEPARTMENT OF COMMERCE

INFORMATION DISCLOSURE STATEMENT BY APPLICANT

(Not for submission under 37 CFR 1.99)

Application Number	
Filing Date	2015-06-12
First Named Inventor	Gilbert ROTA
Art Unit	
Examiner Name	
Attorney Docket Number	5001-1489

U.S.PATENTS Remove

Examiner Initial*	Cite No	Patent Number	Kind Code[1]	Issue Date	Name of Patentee or Applicant of cited Document	Pages,Columns,Lines where Relevant Passages or Relevant Figures Appear
	1	7955078	B2	2011-06-07	Scianamblo	Cited in Specification

If you wish to add additional U.S. Patent citation information please click the Add button. Add

U.S.PATENT APPLICATION PUBLICATIONS Remove

Examiner Initial*	Cite No	Publication Number	Kind Code[1]	Publication Date	Name of Patentee or Applicant of cited Document	Pages,Columns,Lines where Relevant Passages or Relevant Figures Appear
	1	20060265858	A1	2006-11-30	McSpadden	Cited in ISR
	2	20050100859	A1	2005-05-12	Graybill et al.	Cited in ISR
	3	20050282109	A1	2005-12-22	Hagemann	Cited in ISR

If you wish to add additional U.S. Published Application citation information please click the Add button. Add

FOREIGN PATENT DOCUMENTS Remove

Examiner Initial*	Cite No	Foreign Document Number[3]	Country Code[2] ¡	Kind Code[4]	Publication Date	Name of Patentee or Applicant of cited Document	Pages,Columns,Lines where Relevant Passages or Relevant Figures Appear	T[5]
	1	102006007316	DE	A1	2007-08-30		Cited in ISR; English Language Abstract	☐

ALL REFERENCES CONSIDERED EXCEPT WHERE LINED THROUGH. /EDB/

INFORMATION DISCLOSURE STATEMENT BY APPLICANT

(Not for submission under 37 CFR 1.99)

Application Number	
Filing Date	2015-06-12
First Named Inventor	Gilbert ROTA
Art Unit	
Examiner Name	
Attorney Docket Number	5001-1489

	2	1361831	EP	A1	2003-11-19		Cited in Specification; English Language Abstract	☐

If you wish to add additional Foreign Patent Document citation information please click the Add button **Add**

NON-PATENT LITERATURE DOCUMENTS **Remove**

Examiner Initials*	Cite No	Include name of the author (in CAPITAL LETTERS), title of the article (when appropriate), title of the item (book, magazine, journal, serial, symposium, catalog, etc), date, pages(s), volume-issue number(s), publisher, city and/or country where published.	T[5]
	1	International Search Report, dated September 13, 2013, from corresponding PCT application.	☐

If you wish to add additional non-patent literature document citation information please click the Add button **Add**

EXAMINER SIGNATURE

Examiner Signature	/Eric D. Bertram/	Date Considered	08/05/2016

*EXAMINER: Initial if reference considered, whether or not citation is in conformance with MPEP 609. Draw line through a citation if not in conformance and not considered. Include copy of this form with next communication to applicant.

[1] See Kind Codes of USPTO Patent Documents at www.USPTO.GOV or MPEP 901.04. [2] Enter office that issued the document, by the two-letter code (WIPO Standard ST.3). [3] For Japanese patent documents, the indication of the year of the reign of the Emperor must precede the serial number of the patent document. [4] Kind of document by the appropriate symbols as indicated on the document under WIPO Standard ST.16 if possible. [5] Applicant is to place a check mark here if English language translation is attached.

ALL REFERENCES CONSIDERED EXCEPT WHERE LINED THROUGH. /EDB/

INFORMATION DISCLOSURE STATEMENT BY APPLICANT

(Not for submission under 37 CFR 1.99)

Application Number	
Filing Date	2015-06-12
First Named Inventor	Gilbert ROTA
Art Unit	
Examiner Name	
Attorney Docket Number	5001-1489

CERTIFICATION STATEMENT

Please see 37 CFR 1.97 and 1.98 to make the appropriate selection(s):

☐ That each item of information contained in the information disclosure statement was first cited in any communication from a foreign patent office in a counterpart foreign application not more than three months prior to the filing of the information disclosure statement. See 37 CFR 1.97(e)(1).

OR

☐ That no item of information contained in the information disclosure statement was cited in a communication from a foreign patent office in a counterpart foreign application, and, to the knowledge of the person signing the certification after making reasonable inquiry, no item of information contained in the information disclosure statement was known to any individual designated in 37 CFR 1.56(c) more than three months prior to the filing of the information disclosure statement. See 37 CFR 1.97(e)(2).

☐ See attached certification statement.

☐ The fee set forth in 37 CFR 1.17 (p) has been submitted herewith.

☒ A certification statement is not submitted herewith.

SIGNATURE

A signature of the applicant or representative is required in accordance with CFR 1.33, 10.18. Please see CFR 1.4(d) for the form of the signature.

Signature	/Benoit Castel/	Date (YYYY-MM-DD)	2015-06-12
Name/Print	Benoit Castel	Registration Number	35041

This collection of information is required by 37 CFR 1.97 and 1.98. The information is required to obtain or retain a benefit by the public which is to file (and by the USPTO to process) an application. Confidentiality is governed by 35 U.S.C. 122 and 37 CFR 1.14. This collection is estimated to take 1 hour to complete, including gathering, preparing and submitting the completed application form to the USPTO. Time will vary depending upon the individual case. Any comments on the amount of time you require to complete this form and/or suggestions for reducing this burden, should be sent to the Chief Information Officer, U.S. Patent and Trademark Office, U.S. Department of Commerce, P.O. Box 1450, Alexandria, VA 22313-1450. DO NOT SEND FEES OR COMPLETED FORMS TO THIS ADDRESS. **SEND TO: Commissioner for Patents, P.O. Box 1450, Alexandria, VA 22313-1450.**

ALL REFERENCES CONSIDERED EXCEPT WHERE LINED THROUGH. /EDB/

Privacy Act Statement

The Privacy Act of 1974 (P.L. 93-579) requires that you be given certain information in connection with your submission of the attached form related to a patent application or patent. Accordingly, pursuant to the requirements of the Act, please be advised that: (1) the general authority for the collection of this information is 35 U.S.C. 2(b)(2); (2) furnishing of the information solicited is voluntary; and (3) the principal purpose for which the information is used by the U.S. Patent and Trademark Office is to process and/or examine your submission related to a patent application or patent. If you do not furnish the requested information, the U.S. Patent and Trademark Office may not be able to process and/or examine your submission, which may result in termination of proceedings or abandonment of the application or expiration of the patent.

The information provided by you in this form will be subject to the following routine uses:

1. The information on this form will be treated confidentially to the extent allowed under the Freedom of Information Act (5 U.S.C. 552) and the Privacy Act (5 U.S.C. 552a). Records from this system of records may be disclosed to the Department of Justice to determine whether the Freedom of Information Act requires disclosure of these record s.

2. A record from this system of records may be disclosed, as a routine use, in the course of presenting evidence to a court, magistrate, or administrative tribunal, including disclosures to opposing counsel in the course of settlement negotiations.

3. A record in this system of records may be disclosed, as a routine use, to a Member of Congress submitting a request involving an individual, to whom the record pertains, when the individual has requested assistance from the Member with respect to the subject matter of the record.

4. A record in this system of records may be disclosed, as a routine use, to a contractor of the Agency having need for the information in order to perform a contract. Recipients of information shall be required to comply with the requirements of the Privacy Act of 1974, as amended, pursuant to 5 U.S.C. 552a(m).

5. A record related to an International Application filed under the Patent Cooperation Treaty in this system of records may be disclosed, as a routine use, to the International Bureau of the World Intellectual Property Organization, pursuant to the Patent Cooperation Treaty.

6. A record in this system of records may be disclosed, as a routine use, to another federal agency for purposes of National Security review (35 U.S.C. 181) and for review pursuant to the Atomic Energy Act (42 U.S.C. 218(c)).

7. A record from this system of records may be disclosed, as a routine use, to the Administrator, General Services, or his/her designee, during an inspection of records conducted by GSA as part of that agency's responsibility to recommend improvements in records management practices and programs, under authority of 44 U.S.C. 2904 and 2906. Such disclosure shall be made in accordance with the GSA regulations governing inspection of records for this purpose, and any other relevant (i.e., GSA or Commerce) directive. Such disclosure shall not be used to make determinations about individuals.

8. A record from this system of records may be disclosed, as a routine use, to the public after either publication of the application pursuant to 35 U.S.C. 122(b) or issuance of a patent pursuant to 35 U.S.C. 151. Further, a record may be disclosed, subject to the limitations of 37 CFR 1.14, as a routine use, to the public if the record was filed in an application which became abandoned or in which the proceedings were terminated and which application is referenced by either a published application, an application open to public inspections or an issued patent.

9. A record from this system of records may be disclosed, as a routine use, to a Federal, State, or local law enforcement agency, if the USPTO becomes aware of a violation or potential violation of law or regulation.

ALL REFERENCES CONSIDERED EXCEPT WHERE LINED THROUGH. /EDB/

EAST Search History

EAST Search History (Prior Art)

Ref #	Hits	Search Query	DBs	Default Operator	Plurals	Time Stamp
L1	8	rota-gilbert$.in. vallotton-paul$.in.	US-PGPUB; USPAT; EPO; JPO	OR	OFF	2016/08/05 12:08
L2	1	1 and mass.clm.	US-PGPUB; USPAT; EPO; JPO	OR	OFF	2016/08/05 12:08
L3	4	(("7955078") or ("20060265858") or ("20050100859") or ("20050282109")).PN.	US-PGPUB; USPAT; USOCR; EPO; JPO	OR	OFF	2016/08/05 12:09
L4	546	a61c5/023.cpc.	US-PGPUB; USPAT; EPO; JPO	OR	OFF	2016/08/05 12:13
L5	23	4 and (centre or center) with mass	US-PGPUB; USPAT; EPO; JPO	OR	ON	2016/08/05 12:37
L6	14	4 and (centre or center) with mass same (alternat$4 or vary$4 or chang$4 or offset$4)	US-PGPUB; USPAT; EPO; JPO	OR	ON	2016/08/05 12:38

EAST Search History (Interference)

<This search history is empty>

8/5/2016 12:41:37 PM
C:\Users\ebertram\Documents\EAST\Workspaces\14651677.wsp

Search Notes	Application/Control No.	Applicant(s)/Patent Under Reexamination
	14651677	ROTA ET AL.
	Examiner	**Art Unit**
	ERIC D BERTRAM	3766

CPC- SEARCHED		
Symbol	**Date**	**Examiner**
A61C 5/023	8/5/2016	EDB

CPC COMBINATION SETS - SEARCHED		
Symbol	**Date**	**Examiner**

US CLASSIFICATION SEARCHED			
Class	**Subclass**	**Date**	**Examiner**

SEARCH NOTES		
Search Notes	**Date**	**Examiner**
EAST text search	8/5/16	EDB
Inventor search	8/5/16	EDB

INTERFERENCE SEARCH			
US Class/ CPC Symbol	**US Subclass / CPC Group**	**Date**	**Examiner**

MAIL STOP AMENDMENT
PATENT
5001-1489

IN THE U. S. PATENT AND TRADEMARK OFFICE

In re application of

Gilbert ROTA et al. Conf. 4162

Application No. 14/651,677 Group 3766

Filed: June 12, 2015 Examiner BERTRAM, ERIC D.

Title: INSTRUMENT FOR BORING DENTAL ROOT CANALS

AMENDMENT

Assistant Commissioner for Patents November 14, 2016
P.O. Box 1450
Alexandria, VA 22313-1450

Sir:

In response to the non-final Office Action mailed August 11, 2016, please amend the above-identified application as follows:

Amendments to the Specification begin on page 2 of this paper.

Remarks begin on page 3 of this paper.

AMENDMENTS TO THE SPECIFICATION:

Page 1, before line 3, insert the following headings:

BACKGROUND OF THE INVENTION

FIELD OF THE INVENTION

Page 1, before line 5, insert the following heading:

DESCRIPTION OF THE RELATED ART

Page 2, before line 29, insert the following heading:

BRIEF SUMMARY OF THE INVENTION

Page 3, before line 1, insert the following heading:

BRIEF DESCRIPTION OF THE DRAWINGS

Page 4, before line 4, insert the following heading:

DETAILED DESCRIPTION OF THE PREFERRED EMBODIMENTS

Please replace the paragraph beginning at page 2, line 29, with the following rewritten paragraph:

The object of the present invention is an instrument for drilling dental root canals ~~as claimed in claim 1~~.

REMARKS

Claims 1-4 and 7-10 were rejected. The Office objected to claims 5 and 6 but indicated they were allowable.

The specification is amended.

Claims 1-10 are currently pending in this application.

I. Objection to the Specification

The specification is amended.

II. Rejections under 35 U.S.C. § 102/103

In the Office Action, at pages 2-4, claims 1-4 and 7-10 were rejected under 35 U.S.C. § 102(b) or § 103(a) as being unpatentable over US 2006/0265858 to McSpadden ("McSpadden"). These rejections are respectfully traversed.

The present invention is directed to an instrument for drilling dental root canals, illustrated in an exemplary embodiment in Figs. 1-4, reproduced below.

Fig.1

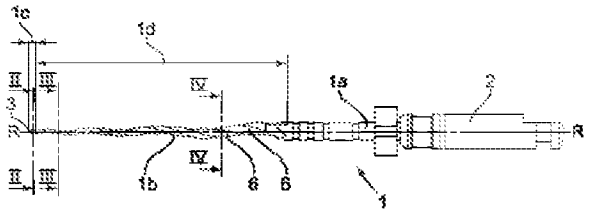

Fig.2

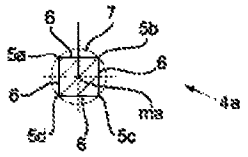

Fig.3

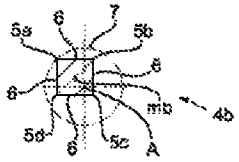

Fig.4

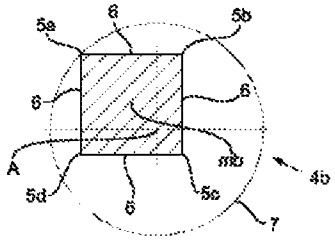

The instrument includes a tapered rod 1 having over at least a part of its length (the active part 1b) a polygonal cross-section 4 forming at least two cutting edges, e.g., 5a, 5b. The active part 1b terminates by a point 3 and is defined by an envelope 7 of a cylindrical or conical shape, the longitudinal axis of which coincides with the axis of rotation R of the instrument. The active part 1b has a first portion 1c extending from the point 3 and a second portion 1d extending following the first portion 1c towards the rear of the active part 1b. Any cross-section, e.g., 4a of the first portion 1c has a center of mass ma located on the axis of rotation R. At least two cutting edges 5a, 5b defined by the cross-section 4a are located on the envelope 7. At least one cross-section,

e.g., 4b of the second portion 1d has a center of mass mb offset with respect to the axis of rotation R and at least one cutting edge 5a defined by the cross-section 4b is located set back within the envelope 7.

These aspects of the present invention are reflected in independent claim 1.

In short, McSpadden does not disclose or suggest that:

> any cross-section (4a; 4'a; 40a) of the first portion (1c) has a centre of mass (ma; m'a m40a) located on the axis of rotation (R) and that said at least two cutting edges (5a, 5b; 52, 54) defined by said cross-section (4a; 4'a; 40a) are located on the envelope (7); and by the fact that at least one cross-section (4b; 4'b; 401b) of the second portion (1d) has a centre of mass (mb; m'b m401b) offset with respect to the axis of rotation (R) and at least one cutting edge (5a; 52, 54) defined by said cross-section (4b; 4'b; 401b) is located set back within the envelope (7),

as recited in independent claim 1.

McSpadden discloses a an instrument for the drilling of dental root canals comprising a tapered shaft, illustrated in Figs. 2A and 3G, reproduced below.

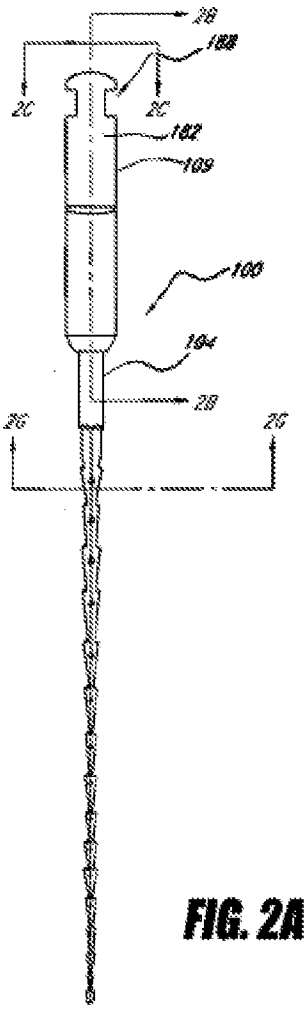

FIG. 2A

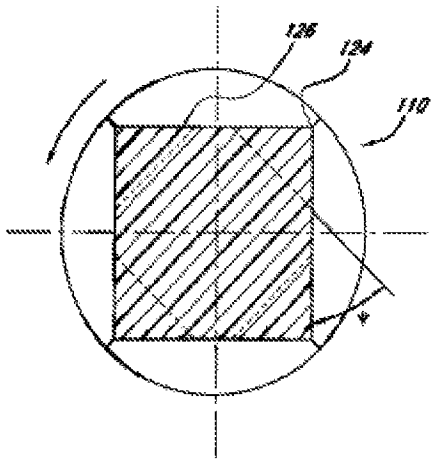

FIG. 2G

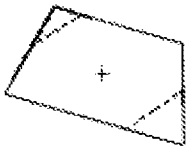

FIG. 3G

McSpadden discloses that the instrument includes a tapered shaft having on at least one part of its length (the working portion 106), a polygonal cross-section. The working portion 106 terminates in a tip 150 and is defined by a cylindrical or conical envelope (see Fig. 2G and para. [0037]), the longitudinal axis of which coincides with the axis of rotation of the instrument. McSpadden discloses that the working portion 106 comprises a first portion (distal end

107) extending from the tip 150 and a second portion extending after the first portion (implicit).

In contrast to the present invention, McSpadden does not disclose or suggest that any cross-section of a first portion has a center of mass located on the axis of rotation and at least two cutting edges defined by the cross-section are located on an envelope, and that at least one cross-section of a second portion has a center of mass offset with respect to the axis of rotation and at least one cutting edge defined by the cross-section located set back within the envelope. In the embodiment illustrated in Fig. 3G and described in para. [0044], McSpadden discloses that at least one cross-section of the second portion of the working portion has a center of mass which is offset with respect to the axis of rotation of the instrument and that at least one cutting edge defined by the cross-section is located set back within the envelope.

However, in contrast to the present invention, McSpadden does not disclose or suggest that in Fig. 3G, any cross-section of the first portion of the working portion has a center of mass located on the axis of rotation of the instrument. In other words, McSpadden does not suggest that any cross-section of the distal portion of an instrument according to Fig. 3G is not asymmetrical.

Para. [0044] of McSpadden states that Fig. 3G is a simplified schematic cross-section representation of a fluteless endodontic file having an asymmetrical polygonal cross-section with notches (hidden lines) and resulting cutting surfaces formed along two of the exposed corners. Thus, Fig. 3G is a simplified schematic view of an asymmetrical transverse cross-section of a dental instrument but without specifying if this cross-section belongs to the distal or proximal end of the working portion of the instrument. In view of the definition of the working portion given in para. [0035] of McSpadden and in particular the lack of information given with respect to Figs. 3A-3H, one of ordinary skill in the art would conclude that an instrument according to the variation of Fig. 3G has an asymmetrical cross-section <u>over the whole length of its working portion including the distal portion</u>.

Fig. 3G does not explicitly disclose an endodontic instrument with a tip centered on the axis of rotation of the instrument.

Further, McSpadden does not disclose the position of the center of mass of the instrument or of one of the transverse cross-sections thereof and particularly does not disclose an asymmetrical cross-section having a center of mass that is offset with respect to the axis of rotation.

One skilled in the art seeking to determine the shape of the tip of the instrument according to Fig. 3G would conclude that the whole of the working portion, including the tip, includes this asymmetrical transverse cross-section and that consequently all the cross-sections of the working portion, including the distal portion, have a center of mass which is offset with respect to the axis of rotation of the instrument. Thus, McSpadden does not disclose an instrument combining a centered tip, with the rest of the working portion being off-center. McSpadden does not disclose an off-centered cross-section only over a portion of the instrument.

In addition, the cutting edges of the instrument according to McSpadden are not continuous, but are instead spaced in a random or regular pattern. Fig. 3G is a cross-section of the first portion which does not have any cutting edges located on the envelope.

The present invention provides continuous cutting edges which are active to the tip, flexibility at the rear of the working portion (with a reduction in the screwing effect which can be present with continuous cutting edges), and precision at the tip (e.g., no beating motion) by virtue of the combination of off-centered cross-sections at the rear and of a centered tip.

Therefore, McSpadden does not disclose or suggest all the features of independent claim 1, and claim 1 is

patentably distinguished over the references relied upon. Claims 2-4 and 7-10 depend either directly or indirectly from independent claim 1, and are therefore patentably distinguished over the reference relied upon for at least the reasons discussed above. Accordingly, withdrawal of the §102(b) or § 103(a) rejection is respectfully requested.

III. Allowable Subject Matter

Applicant is appreciative of the indication that claims 5 and 6 would be allowable if rewritten in independent form. As claim 1 is patentably distinguished over the reference relied upon, claims 5 and 6 are not rewritten in independent form at this time.

IV. Conclusion

In view of the foregoing remarks, it is believed that the present application has been placed in condition for allowance. Reconsideration and allowance are respectfully requested.

The Commissioner is hereby authorized in this, concurrent, and future submissions to charge any additional fees(s) or underpayment of fee(s) under 37 C.F.R. §§ 1.16 and 1.17 or credit any overpayment of fee(s) to Deposit Account No. 25-0120.

Respectfully submitted,

YOUNG & THOMPSON

/Kari P. Footland/

Kari P. Footland, Reg. No. 55,187
Customer No. 00466
209 Madison Street, Suite 500
Alexandria, VA 22314
Telephone (703) 521-2297
Facsimile (703) 685-0573

KPF/ils

Electronic Acknowledgement Receipt

EFS ID:	27506236
Application Number:	14651677
International Application Number:	
Confirmation Number:	4162
Title of Invention:	INSTRUMENT FOR DRILLING DENTAL ROOT CANALS
First Named Inventor/Applicant Name:	Gilbert ROTA
Customer Number:	466
Filer:	Benoit Castel/Irene Sorto
Filer Authorized By:	Benoit Castel
Attorney Docket Number:	5001-1489
Receipt Date:	14-NOV-2016
Filing Date:	12-JUN-2015
Time Stamp:	17:45:42
Application Type:	U.S. National Stage under 35 USC 371

Payment information:

Submitted with Payment	no

File Listing:

Document Number	Document Description	File Name	File Size(Bytes)/ Message Digest	Multi Part /.zip	Pages (if appl.)
1		AMD.pdf	124432 f2142d8e39014a992ffc811637377b5750be211c	yes	11

	Multipart Description/PDF files in .zip description		
	Document Description	**Start**	**End**
	Amendment/Req. Reconsideration-After Non-Final Reject	1	1
	Specification	2	2
	Applicant Arguments/Remarks Made in an Amendment	3	11

Warnings:

Information:

Total Files Size (in bytes):	124432

This Acknowledgement Receipt evidences receipt on the noted date by the USPTO of the indicated documents, characterized by the applicant, and including page counts, where applicable. It serves as evidence of receipt similar to a Post Card, as described in MPEP 503.

New Applications Under 35 U.S.C. 111
If a new application is being filed and the application includes the necessary components for a filing date (see 37 CFR 1.53(b)-(d) and MPEP 506), a Filing Receipt (37 CFR 1.54) will be issued in due course and the date shown on this Acknowledgement Receipt will establish the filing date of the application.

National Stage of an International Application under 35 U.S.C. 371
If a timely submission to enter the national stage of an international application is compliant with the conditions of 35 U.S.C. 371 and other applicable requirements a Form PCT/DO/EO/903 indicating acceptance of the application as a national stage submission under 35 U.S.C. 371 will be issued in addition to the Filing Receipt, in due course.

New International Application Filed with the USPTO as a Receiving Office
If a new international application is being filed and the international application includes the necessary components for an international filing date (see PCT Article 11 and MPEP 1810), a Notification of the International Application Number and of the International Filing Date (Form PCT/RO/105) will be issued in due course, subject to prescriptions concerning national security, and the date shown on this Acknowledgement Receipt will establish the international filing date of the application.

PTO/SB/06 (09-11)
Approved for use through 1/31/2014. OMB 0651-0032
U.S. Patent and Trademark Office; U.S. DEPARTMENT OF COMMERCE

PATENT APPLICATION FEE DETERMINATION RECORD

Substitute for Form PTO-875

Application or Docket Number	Filing Date	
14/651,677	06/12/2015	☐ To be Mailed

ENTITY: ☒ LARGE ☐ SMALL ☐ MICRO

APPLICATION AS FILED – PART I

FOR	(Column 1) NUMBER FILED	(Column 2) NUMBER EXTRA	RATE ($)	FEE ($)
☐ BASIC FEE (37 CFR 1.16(a), (b), or (c))	N/A	N/A	N/A	
☐ SEARCH FEE (37 CFR 1.16(k), (i), or (m))	N/A	N/A	N/A	
☐ EXAMINATION FEE (37 CFR 1.16(o), (p), or (q))	N/A	N/A	N/A	
TOTAL CLAIMS (37 CFR 1.16(i))	minus 20 =	*	x $ =	
INDEPENDENT CLAIMS (37 CFR 1.16(h))	minus 3 =	*	x $ =	
☐ APPLICATION SIZE FEE (37 CFR 1.16(s))	If the specification and drawings exceed 100 sheets of paper, the application size fee due is $310 ($155 for small entity) for each additional 50 sheets or fraction thereof. See 35 U.S.C. 41(a)(1)(G) and 37 CFR 1.16(s).			
☐ MULTIPLE DEPENDENT CLAIM PRESENT (37 CFR 1.16(j))				
* If the difference in column 1 is less than zero, enter "0" in column 2.			TOTAL	

APPLICATION AS AMENDED – PART II

AMENDMENT 11/14/2016

	(Column 1) CLAIMS REMAINING AFTER AMENDMENT		(Column 2) HIGHEST NUMBER PREVIOUSLY PAID FOR	(Column 3) PRESENT EXTRA	RATE ($)	ADDITIONAL FEE ($)
Total (37 CFR 1.16(i))	* 10	Minus	** 20	= 0	x $80 =	0
Independent (37 CFR 1.16(h))	* 1	Minus	***3	= 0	x $420 =	0
☐ Application Size Fee (37 CFR 1.16(s))						
☐ FIRST PRESENTATION OF MULTIPLE DEPENDENT CLAIM (37 CFR 1.16(j))						
					TOTAL ADD'L FEE	0

AMENDMENT

	(Column 1) CLAIMS REMAINING AFTER AMENDMENT		(Column 2) HIGHEST NUMBER PREVIOUSLY PAID FOR	(Column 3) PRESENT EXTRA	RATE ($)	ADDITIONAL FEE ($)
Total (37 CFR 1.16(i))	*	Minus	**	=	x $ =	
Independent (37 CFR 1.16(h))	*	Minus	***	=	x $ =	
☐ Application Size Fee (37 CFR 1.16(s))						
☐ FIRST PRESENTATION OF MULTIPLE DEPENDENT CLAIM (37 CFR 1.16(j))						
					TOTAL ADD'L FEE	

* If the entry in column 1 is less than the entry in column 2, write "0" in column 3.
** If the "Highest Number Previously Paid For" IN THIS SPACE is less than 20, enter "20".
*** If the "Highest Number Previously Paid For" IN THIS SPACE is less than 3, enter "3".
The "Highest Number Previously Paid For" (Total or Independent) is the highest number found in the appropriate box in column 1.

LIE
ANTHONY WILLIAMS

UNITED STATES PATENT AND TRADEMARK OFFICE

UNITED STATES DEPARTMENT OF COMMERCE
United States Patent and Trademark Office
Address: COMMISSIONER FOR PATENTS
P.O. Box 1450
Alexandria, Virginia 22313-1450
www.uspto.gov

APPLICATION NO.	FILING DATE	FIRST NAMED INVENTOR	ATTORNEY DOCKET NO.	CONFIRMATION NO.
14/651,677	06/12/2015	Gilbert ROTA	5001-1489	4162

466 7590 **01/30/2017**
YOUNG & THOMPSON
209 Madison Street
Suite 500
Alexandria, VA 22314

EXAMINER
BERTRAM, ERIC D

ART UNIT	PAPER NUMBER
3766	

NOTIFICATION DATE	DELIVERY MODE
01/30/2017	ELECTRONIC

Please find below and/or attached an Office communication concerning this application or proceeding.

The time period for reply, if any, is set in the attached communication.

Notice of the Office communication was sent electronically on above-indicated "Notification Date" to the following e-mail address(es):

DocketingDept@young-thompson.com
yandtpair@firsttofile.com

Office Action Summary	Application No. 14/651,677	Applicant(s) ROTA ET AL.	
	Examiner Eric D. Bertram	Art Unit 3766	AIA (First Inventor to File) Status No

-- The MAILING DATE of this communication appears on the cover sheet with the correspondence address --

Period for Reply

A SHORTENED STATUTORY PERIOD FOR REPLY IS SET TO EXPIRE 3 MONTHS FROM THE MAILING DATE OF THIS COMMUNICATION.

- Extensions of time may be available under the provisions of 37 CFR 1.136(a). In no event, however, may a reply be timely filed after SIX (6) MONTHS from the mailing date of this communication.
- If NO period for reply is specified above, the maximum statutory period will apply and will expire SIX (6) MONTHS from the mailing date of this communication.
- Failure to reply within the set or extended period for reply will, by statute, cause the application to become ABANDONED (35 U.S.C. § 133). Any reply received by the Office later than three months after the mailing date of this communication, even if timely filed, may reduce any earned patent term adjustment. See 37 CFR 1.704(b).

Status

1)☒ Responsive to communication(s) filed on *11/14/2016*.

☐ A declaration(s)/affidavit(s) under **37 CFR 1.130(b)** was/were filed on _____.

2a)☐ This action is **FINAL**. 2b)☒ This action is non-final.

3)☐ An election was made by the applicant in response to a restriction requirement set forth during the interview on _____; the restriction requirement and election have been incorporated into this action.

4)☐ Since this application is in condition for allowance except for formal matters, prosecution as to the merits is closed in accordance with the practice under *Ex parte Quayle*, 1935 C.D. 11, 453 O.G. 213.

Disposition of Claims*

5)☒ Claim(s) *1-10* is/are pending in the application.

5a) Of the above claim(s) _____ is/are withdrawn from consideration.

6)☐ Claim(s) _____ is/are allowed.

7)☒ Claim(s) *1-10* is/are rejected.

8)☐ Claim(s) _____ is/are objected to.

9)☐ Claim(s) _____ are subject to restriction and/or election requirement.

* If any claims have been determined allowable, you may be eligible to benefit from the **Patent Prosecution Highway** program at a participating intellectual property office for the corresponding application. For more information, please see http://www.uspto.gov/patents/init_events/pph/index.jsp or send an inquiry to PPHfeedback@uspto.gov.

Application Papers

10)☐ The specification is objected to by the Examiner.

11)☐ The drawing(s) filed on _____ is/are: a)☐ accepted or b)☐ objected to by the Examiner.

Applicant may not request that any objection to the drawing(s) be held in abeyance. See 37 CFR 1.85(a).

Replacement drawing sheet(s) including the correction is required if the drawing(s) is objected to. See 37 CFR 1.121(d).

Priority under 35 U.S.C. § 119

12)☐ Acknowledgment is made of a claim for foreign priority under 35 U.S.C. § 119(a)-(d) or (f).

Certified copies:

a)☐ All b)☐ Some** c)☐ None of the:

1.☐ Certified copies of the priority documents have been received.

2.☐ Certified copies of the priority documents have been received in Application No. _____.

3.☐ Copies of the certified copies of the priority documents have been received in this National Stage application from the International Bureau (PCT Rule 17.2(a)).

** See the attached detailed Office action for a list of the certified copies not received.

Attachment(s)

1) ☒ Notice of References Cited (PTO-892)

2) ☐ Information Disclosure Statement(s) (PTO/SB/08a and/or PTO/SB/08b) Paper No(s)/Mail Date _____.

3) ☐ Interview Summary (PTO-413) Paper No(s)/Mail Date. _____ .

4) ☐ Other: _____.

1. The present application is being examined under the pre-AIA first to invent provisions.

Response to Arguments

2. Applicant's arguments filed 11/14/2016 with respect to the rejections of claims 1-4 and 7-10 under 35 USC 102 and 103 in view of McSpadden (US 2006/0265858) have been fully considered and are persuasive. Therefore, the rejection has been withdrawn. However, upon further consideration, a new ground(s) of rejection is made in view of McSpadden (US 2006/0228668).

3. Furthermore, the indicated allowability of claims 5 and 6 is withdrawn in view of the newly discovered reference(s) to McSpadden. Rejections based on the newly cited reference(s) follow.

Claim Rejections - 35 USC § 102

4. In the event the determination of the status of the application as subject to AIA 35 U.S.C. 102 and 103 (or as subject to pre-AIA 35 U.S.C. 102 and 103) is incorrect, any correction of the statutory basis for the rejection will not be considered a new ground of rejection if the prior art relied upon, and the rationale supporting the rejection, would be the same under either status.

5. The following is a quotation of the appropriate paragraphs of pre-AIA 35 U.S.C. 102 that form the basis for the rejections under this section made in this Office action:

> A person shall be entitled to a patent unless –
>
> (b) the invention was patented or described in a printed publication in this or a foreign country or in public use or on sale in this country, more than one year prior to the date of application for patent in the United States.

6. Claim(s) 1-7, 9 and 10 are rejected under pre-AIA 35 U.S.C. 102(b) as being anticipated by McSpadden (US 2006/0228668).

7. Regarding claims 1-4, 7 and 10, McSpadden discloses an instrument shown in figure 1 for drilling root canals comprising a tapered rod having an active part with a polygonal cross section forming at least two cutting edges (see figure 3A, figure 3D and figures 4A-4I). The active part terminates at a point 250 and is defined by an envelope (best defined by a combination of α_1, α_2, α_3) with a cylindrical or conical shape (par. 0055). As seen in figures 3A and 3C, the longitudinal axis 215 of the instrument coincides with the axis of rotation of the instrument at the tip and a cone (considered the claimed first portion) extends proximal to the tip such that the cone is symmetrical around the longitudinal axis and thus has a center of mass located on the axis of rotation. At least two cutting edges are located on the envelope. A second portion extends proximal the first portion and has a zone illustrated in figure 3C that is proximal to the first portion, and is shown to have portions with a center of mass that becomes more and more offset with respect to the axis of rotation as you move proximally from the distal point and at least one cutting edge is set back within the envelope.

8. Regarding claims 5 and 6, Figure 3A shows that the second portion is "wavy" such that there are alternating zones with a center of mass on the axis of rotation and zones with a center of mass offset to the axis of rotation, such that the waves also change which cutting edges are inside and/or on the envelope.

9. Regarding claim 9, the Examiner considers the first millimeter of the distal tip t be the “first portion.”

Claim Rejections - 35 USC § 103

10. In the event the determination of the status of the application as subject to AIA 35 U.S.C. 102 and 103 (or as subject to pre-AIA 35 U.S.C. 102 and 103) is incorrect, any correction of the statutory basis for the rejection will not be considered a new ground of rejection if the prior art relied upon, and the rationale supporting the rejection, would be the same under either status.

11. The following is a quotation of pre-AIA 35 U.S.C. 103(a) which forms the basis for all obviousness rejections set forth in this Office action:

> (a) A patent may not be obtained though the invention is not identically disclosed or described as set forth in section 102, if the differences between the subject matter sought to be patented and the prior art are such that the subject matter as a whole would have been obvious at the time the invention was made to a person having ordinary skill in the art to which said subject matter pertains. Patentability shall not be negatived by the manner in which the invention was made.

12. The factual inquiries set forth in *Graham v. John Deere Co.*, 383 U.S. 1, 148 USPQ 459 (1966), that are applied for establishing a background for determining obviousness under pre-AIA 35 U.S.C. 103(a) are summarized as follows:

1. Determining the scope and contents of the prior art.
2. Ascertaining the differences between the prior art and the claims at issue.
3. Resolving the level of ordinary skill in the pertinent art.
4. Considering objective evidence present in the application indicating obviousness or nonobviousness.

13. This application currently names joint inventors. In considering patentability of the claims under pre-AIA 35 U.S.C. 103(a), the examiner presumes that the subject matter of the various claims was commonly owned at the time any inventions covered therein were made absent any evidence to the contrary. Applicant is advised of the obligation

under 37 CFR 1.56 to point out the inventor and invention dates of each claim that was not commonly owned at the time a later invention was made in order for the examiner to consider the applicability of pre-AIA 35 U.S.C. 103(c) and potential pre-AIA 35 U.S.C. 102(e), (f) or (g) prior art under pre-AIA 35 U.S.C. 103(a).

14. Claim 8 is rejected under pre-AIA 35 U.S.C. 103(a) as being unpatentable over McSpadden.

15. Mcspadden, as described above, discloses the applicant's basic invention, but is silent as to the cross sections being square or rectangular. However, based on the applicant's specification, these appear to be design choices that do not affect the operation of the invention in any meaningful way. Therefore, it would have been obvious to one of ordinary skill in the art at the time of the applicant's invention to modify McSpadden to include square and/or rectangular cross sections as it has been held that, where the only difference between the prior art and the claims was a recitation of relative dimensions of the claimed device and a device having the claimed relative dimensions would not perform differently than the prior art device, the claimed device was not patentably distinct from the prior art device (In *Gardner v. TEC Cyst, Inc,,* 725 F.2d 1338, 220 USPQ 777 (Fed. Cir, 1984), *cert denied,* 469 U.S. 830, 225 USPQ 232 (1984) and it has further been held that the configuration of a claimed invention is a matter of choice which a person of ordinary skill in the art would have found obvious absent persuasive evidence that the particular configuration of the claimed invention was significant *(In re Dailey*, 357 F.2d 689, 149 USPQ 47 (CCPA 1966).

Conclusion

Any inquiry concerning this communication or earlier communications from the examiner should be directed to Eric D. Bertram whose telephone number is (571)272-3446. The examiner can normally be reached on Monday-Friday from 10-5 EST.

If attempts to reach the examiner by telephone are unsuccessful, the examiner's supervisor, Carl H. Layno can be reached on 571-272-4949. The fax phone number for the organization where this application or proceeding is assigned is 571-273-8300.

Information regarding the status of an application may be obtained from the Patent Application Information Retrieval (PAIR) system. Status information for published applications may be obtained from either Private PAIR or Public PAIR. Status information for unpublished applications is available through Private PAIR only. For more information about the PAIR system, see http://pair-direct.uspto.gov. Should you have questions on access to the Private PAIR system, contact the Electronic Business Center (EBC) at 866-217-9197 (toll-free). If you would like assistance from a USPTO Customer Service Representative or access to the automated information system, call 800-786-9199 (IN USA OR CANADA) or 571-272-1000.

/Eric D. Bertram/
Primary Examiner, Art Unit 3766

Notice of References Cited	Application/Control No. 14/651,677	Applicant(s)/Patent Under Reexamination ROTA ET AL.	
	Examiner Eric D. Bertram	Art Unit 3766	Page 1 of 1

U.S. PATENT DOCUMENTS

*		Document Number Country Code-Number-Kind Code	Date MM-YYYY	Name	CPC Classification	US Classification
*	A	US-2006/0228668 A1	10-2006	McSpadden; John T.	A61C5/023	433/102
	B	US-				
	C	US-				
	D	US-				
	E	US-				
	F	US-				
	G	US-				
	H	US-				
	I	US-				
	J	US-				
	K	US-				
	L	US-				
	M	US-				

FOREIGN PATENT DOCUMENTS

*		Document Number Country Code-Number-Kind Code	Date MM-YYYY	Country	Name	CPC Classification
	N					
	O					
	P					
	Q					
	R					
	S					
	T					

NON-PATENT DOCUMENTS

*		Include as applicable: Author, Title Date, Publisher, Edition or Volume, Pertinent Pages)
	U	
	V	
	W	
	X	

*A copy of this reference is not being furnished with this Office action. (See MPEP § 707.05(a).)
Dates in MM-YYYY format are publication dates. Classifications may be US or foreign.

EAST Search History

EAST Search History (Prior Art)

Ref #	Hits	Search Query	DBs	Default Operator	Plurals	Time Stamp
L2	559	a61c5/023.cpc.	US-PGPUB; USPAT; EPO; JPO	OR	OFF	2017/01/24 09:49
L3	23	L2 and cent$2 near2 mass	US-PGPUB; USPAT; EPO; JPO	OR	OFF	2017/01/24 09:49
L4	23	L2 and cent$2 near2 mass same axis with rotation	US-PGPUB; USPAT; EPO; JPO	OR	OFF	2017/01/24 09:49
L5	102	(rat with tail with file) or (barbed with broach)	US-PGPUB; USPAT; EPO; JPO	OR	OFF	2017/01/24 09:57
L6	93	(rat with tail with file) or (barbed with broach) and root with canal	US-PGPUB; USPAT; EPO; JPO	OR	OFF	2017/01/24 09:57
S1	8	rota-gilbert$.in. vallotton-paul$.in.	US-PGPUB; USPAT; EPO; JPO	OR	OFF	2016/08/05 12:08
S2	1	S1 and mass.clm.	US-PGPUB; USPAT; EPO; JPO	OR	OFF	2016/08/05 12:08
S3	4	(("7955078") or ("20060265858") or ("20050100859") or ("20050282109")).PN.	US-PGPUB; USPAT; USOCR; EPO; JPO	OR	OFF	2016/08/05 12:09
S4	546	a61c5/023.cpc.	US-PGPUB; USPAT; EPO; JPO	OR	OFF	2016/08/05 12:13
S5	23	S4 and (centre or center) with mass	US-PGPUB; USPAT; EPO; JPO	OR	ON	2016/08/05 12:37
S6	14	S4 and (centre or center) with mass same (alternat$4 or vary$4 or chang$4 or offset$4)	US-PGPUB; USPAT; EPO; JPO	OR	ON	2016/08/05 12:38

EAST Search History (Interference)

<This search history is empty>

1/24/2017 11:19:17 AM
C:\Users\ebertram\Documents\EAST\Workspaces\14651677.wsp

Search Notes	Application/Control No.	Applicant(s)/Patent Under Reexamination
	14651677	ROTA ET AL.
	Examiner	**Art Unit**
	ERIC D BERTRAM	3766

CPC- SEARCHED

Symbol	Date	Examiner
A61C 5/023	8/5/2016	EDB

CPC COMBINATION SETS - SEARCHED

Symbol	Date	Examiner

US CLASSIFICATION SEARCHED

Class	Subclass	Date	Examiner

SEARCH NOTES

Search Notes	Date	Examiner
EAST text search	8/5/16	EDB
Inventor search	8/5/16	EDB
EAST text search	1/24/17	EDB

INTERFERENCE SEARCH

US Class/ CPC Symbol	US Subclass / CPC Group	Date	Examiner

PTO/SB/08a (01-10)
Approved for use through 07/31/2012. OMB 0651-0031
U.S. Patent and Trademark Office; U.S. DEPARTMENT OF COMMERCE

INFORMATION DISCLOSURE STATEMENT BY APPLICANT

(Not for submission under 37 CFR 1.99)

Application Number	14651677
Filing Date	2015-06-12
First Named Inventor	Gilbert ROTA
Art Unit	3766
Examiner Name	Eric BERTRAM
Attorney Docket Number	5001-1489

U.S.PATENTS Remove

Examiner Initial*	Cite No	Patent Number	Kind Code[1]	Issue Date	Name of Patentee or Applicant of cited Document	Pages,Columns,Lines where Relevant Passages or Relevant Figures Appear
	1					

If you wish to add additional U.S. Patent citation information please click the Add button. Add

U.S.PATENT APPLICATION PUBLICATIONS Remove

Examiner Initial*	Cite No	Publication Number	Kind Code[1]	Publication Date	Name of Patentee or Applicant of cited Document	Pages,Columns,Lines where Relevant Passages or Relevant Figures Appear
	1					

If you wish to add additional U.S. Published Application citation information please click the Add button. Add

FOREIGN PATENT DOCUMENTS Remove

Examiner Initial*	Cite No	Foreign Document Number[3]	Country Code[2] i	Kind Code[4]	Publication Date	Name of Patentee or Applicant of cited Document	Pages,Columns,Lines where Relevant Passages or Relevant Figures Appear	T[5]
	1	2009502349	JP		2009-01-29		English Abstract of US 2007026360; Cited in Japanese Office Action	
	2	2012038437	WO		2012-03-29		English Abstract; Cited in Japanese Office Action	

If you wish to add additional Foreign Patent Document citation information please click the Add button Add

NON-PATENT LITERATURE DOCUMENTS Remove

INFORMATION DISCLOSURE STATEMENT BY APPLICANT (Not for submission under 37 CFR 1.99)	Application Number	14651677
	Filing Date	2015-06-12
	First Named Inventor	Gilbert ROTA
	Art Unit	3766
	Examiner Name	Eric BERTRAM
	Attorney Docket Number	5001-1489

Examiner Initials*	Cite No	Include name of the author (in CAPITAL LETTERS), title of the article (when appropriate), title of the item (book, magazine, journal, serial, symposium, catalog, etc), date, pages(s), volume-issue number(s), publisher, city and/or country where published.	T[5]
	1	Japanese Office Action dated January 18, 2017; Application No. 2015-554257	

If you wish to add additional non-patent literature document citation information please click the Add button Add

EXAMINER SIGNATURE

Examiner Signature		Date Considered	

*EXAMINER: Initial if reference considered, whether or not citation is in conformance with MPEP 609. Draw line through a citation if not in conformance and not considered. Include copy of this form with next communication to applicant.

[1] See Kind Codes of USPTO Patent Documents at www.USPTO.GOV or MPEP 901.04. [2] Enter office that issued the document, by the two-letter code (WIPO Standard ST.3). [3] For Japanese patent documents, the indication of the year of the reign of the Emperor must precede the serial number of the patent document. [4] Kind of document by the appropriate symbols as indicated on the document under WIPO Standard ST.16 if possible. [5] Applicant is to place a check mark here if English language translation is attached.

INFORMATION DISCLOSURE STATEMENT BY APPLICANT (Not for submission under 37 CFR 1.99)		
	Application Number	14651677
	Filing Date	2015-06-12
	First Named Inventor	Gilbert ROTA
	Art Unit	3766
	Examiner Name	Eric BERTRAM
	Attorney Docket Number	5001-1489

CERTIFICATION STATEMENT

Please see 37 CFR 1.97 and 1.98 to make the appropriate selection(s):

☒ That each item of information contained in the information disclosure statement was first cited in any communication from a foreign patent office in a counterpart foreign application not more than three months prior to the filing of the information disclosure statement. See 37 CFR 1.97(e)(1).

OR

☐ That no item of information contained in the information disclosure statement was cited in a communication from a foreign patent office in a counterpart foreign application, and, to the knowledge of the person signing the certification after making reasonable inquiry, no item of information contained in the information disclosure statement was known to any individual designated in 37 CFR 1.56(c) more than three months prior to the filing of the information disclosure statement. See 37 CFR 1.97(e)(2).

☒ See attached certification statement.

The fee set forth in 37 CFR 1.17 (p) has been submitted herewith.

A certification statement is not submitted herewith.

SIGNATURE

A signature of the applicant or representative is required in accordance with CFR 1.33, 10.18. Please see CFR 1.4(d) for the form of the signature.

Signature	/Eric Jensen/	Date (YYYY-MM-DD)	2017-03-13
Name/Print	Eric Jensen	Registration Number	37,855

This collection of information is required by 37 CFR 1.97 and 1.98. The information is required to obtain or retain a benefit by the public which is to file (and by the USPTO to process) an application. Confidentiality is governed by 35 U.S.C. 122 and 37 CFR 1.14. This collection is estimated to take 1 hour to complete, including gathering, preparing and submitting the completed application form to the USPTO. Time will vary depending upon the individual case. Any comments on the amount of time you require to complete this form and/or suggestions for reducing this burden, should be sent to the Chief Information Officer, U.S. Patent and Trademark Office, U.S. Department of Commerce, P.O. Box 1450, Alexandria, VA 22313-1450. DO NOT SEND FEES OR COMPLETED FORMS TO THIS ADDRESS. **SEND TO: Commissioner for Patents, P.O. Box 1450, Alexandria, VA 22313-1450.**

Privacy Act Statement

The Privacy Act of 1974 (P.L. 93-579) requires that you be given certain information in connection with your submission of the attached form related to a patent application or patent. Accordingly, pursuant to the requirements of the Act, please be advised that: (1) the general authority for the collection of this information is 35 U.S.C. 2(b)(2); (2) furnishing of the information solicited is voluntary; and (3) the principal purpose for which the information is used by the U.S. Patent and Trademark Office is to process and/or examine your submission related to a patent application or patent. If you do not furnish the requested information, the U.S. Patent and Trademark Office may not be able to process and/or examine your submission, which may result in termination of proceedings or abandonment of the application or expiration of the patent.

The information provided by you in this form will be subject to the following routine uses:

1. The information on this form will be treated confidentially to the extent allowed under the Freedom of Information Act (5 U.S.C. 552) and the Privacy Act (5 U.S.C. 552a). Records from this system of records may be disclosed to the Department of Justice to determine whether the Freedom of Information Act requires disclosure of these record s.

2. A record from this system of records may be disclosed, as a routine use, in the course of presenting evidence to a court, magistrate, or administrative tribunal, including disclosures to opposing counsel in the course of settlement negotiations.

3. A record in this system of records may be disclosed, as a routine use, to a Member of Congress submitting a request involving an individual, to whom the record pertains, when the individual has requested assistance from the Member with respect to the subject matter of the record.

4. A record in this system of records may be disclosed, as a routine use, to a contractor of the Agency having need for the information in order to perform a contract. Recipients of information shall be required to comply with the requirements of the Privacy Act of 1974, as amended, pursuant to 5 U.S.C. 552a(m).

5. A record related to an International Application filed under the Patent Cooperation Treaty in this system of records may be disclosed, as a routine use, to the International Bureau of the World Intellectual Property Organization, pursuant to the Patent Cooperation Treaty.

6. A record in this system of records may be disclosed, as a routine use, to another federal agency for purposes of National Security review (35 U.S.C. 181) and for review pursuant to the Atomic Energy Act (42 U.S.C. 218(c)).

7. A record from this system of records may be disclosed, as a routine use, to the Administrator, General Services, or his/her designee, during an inspection of records conducted by GSA as part of that agency's responsibility to recommend improvements in records management practices and programs, under authority of 44 U.S.C. 2904 and 2906. Such disclosure shall be made in accordance with the GSA regulations governing inspection of records for this purpose, and any other relevant (i.e., GSA or Commerce) directive. Such disclosure shall not be used to make determinations about individuals.

8. A record from this system of records may be disclosed, as a routine use, to the public after either publication of the application pursuant to 35 U.S.C. 122(b) or issuance of a patent pursuant to 35 U.S.C. 151. Further, a record may be disclosed, subject to the limitations of 37 CFR 1.14, as a routine use, to the public if the record was filed in an application which became abandoned or in which the proceedings were terminated and which application is referenced by either a published application, an application open to public inspections or an issued patent.

9. A record from this system of records may be disclosed, as a routine use, to a Federal, State, or local law enforcement agency, if the USPTO becomes aware of a violation or potential violation of law or regulation.

Espacenet

Bibliographic data: JP2009502349 (A) — 2009-01-29

Variable-land, multiple height flute contour design for endodontic files

Inventor(s):

Applicant(s):

Classification:	**- international:**	***A61C5/02***
	- cooperative:	**A61C5/42**
Application number:	JP20080524158 20060726	Global Dossier
Priority number(s):	US20050703766P 20050728 ; US20060493460 20060725 ; WO2006US29262 20060726	
Also published as:	JP4729102 (B2) US2007026360 (A1) US8408901 (B2) WO2007016278 (A1) RU2008107587 (A) more	

Abstract not available for JP2009502349 (A)
Abstract of corresponding document: US2007026360 (A1)

A tapered endodontic rotary file for shaping or cleaning a root canal in a tooth has one or more flutes spiraling along the length of the file. The diameters of the one or more flutes tapers in a non-uniform manner from a first diameter in a shank portion of the file to a smaller diameter in a tip portion of the file such that at least one flute region intermediate the shank portion and the tip portion has a diameter less than a straight line taper from the shank portion to the tip portion. The flutes can also be landed and the width of the lands can be varied along the length of the file. In particular, the width of the lands in the intermediate region are wider than the width in the tip or shank portion.

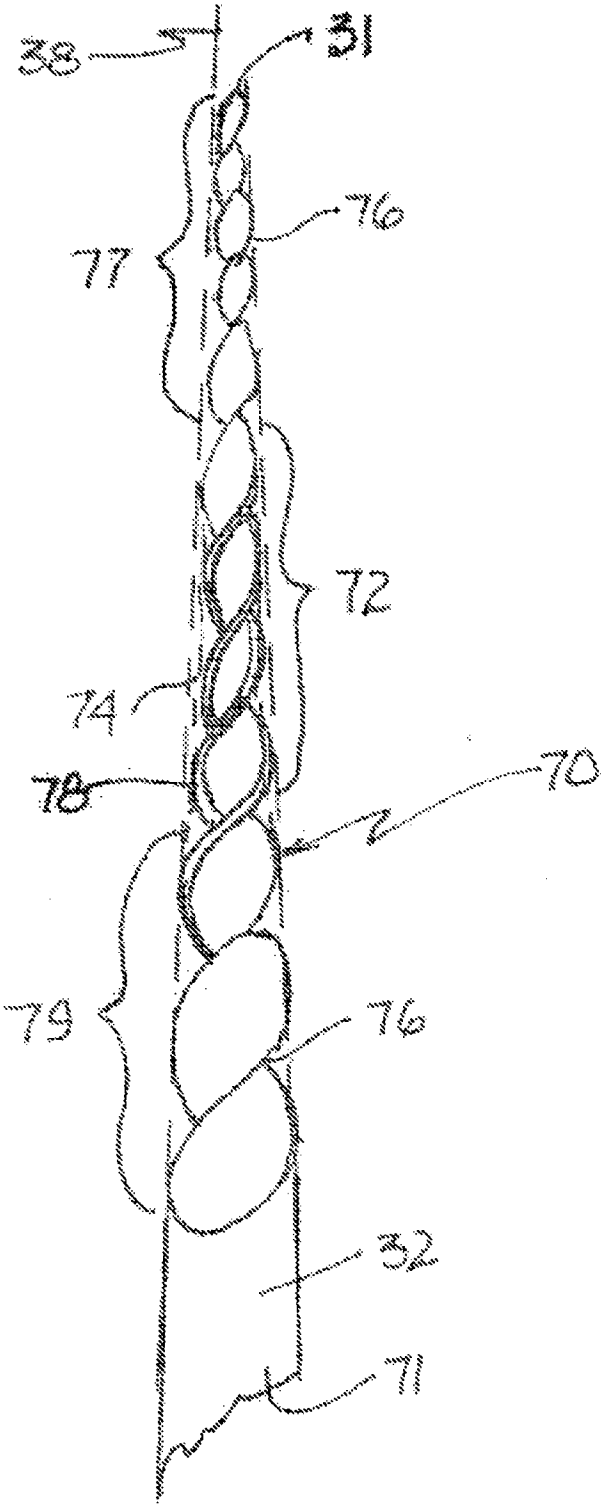
38
31
76
77
72
74
78
70
79
76
32
71

D1

(19)日本国特許庁(JP)　(12)公表特許公報(A)　(11)特許出願公表番号
特表2009-502349
(P2009-502349A)
(43)公表日　平成21年1月29日(2009.1.29)

(51)Int.Cl.		F I	テーマコード(参考)
A61C 5/02	(2006.01)	A61C 5/02	4C052

審査請求 有　予備審査請求 未請求　(全 15 頁)

(21)出願番号	特願2008-524158 (P2008-524158)
(86)(22)出願日	平成18年7月26日 (2006.7.26)
(85)翻訳文提出日	平成20年3月28日 (2008.3.28)
(86)国際出願番号	PCT/US2006/029262
(87)国際公開番号	WO2007/016278
(87)国際公開日	平成19年2月8日 (2007.2.8)
(31)優先権主張番号	60/703,766
(32)優先日	平成17年7月28日 (2005.7.28)
(33)優先権主張国	米国(US)
(31)優先権主張番号	11/493,460
(32)優先日	平成18年7月25日 (2006.7.25)
(33)優先権主張国	米国(US)

(71)出願人　508027774
エル．スティーブン　ブキャナン
アメリカ合衆国　９３１０３　カリフォルニア州　サンタ　バーバラ　イースト　コタ　ストリート　８０２　サード　フロア
(74)代理人　100077481
弁理士　谷　義一
(74)代理人　100088915
弁理士　阿部　和夫
(72)発明者　エル．スティーブン　ブキャナン
アメリカ合衆国　９３１０３　カリフォルニア州　サンタ　バーバラ　イースト　コタ　ストリート　８０２　サード　フロア

Fターム(参考)　4C052 AA16 DD02

最終頁に続く

(54)【発明の名称】歯内治療用ファイルのための可変ランド多高フルート（multipleheightflute）輪郭設計

(57)【要約】
歯内の根管を形成し切り開くためのテーパ状の歯内治療用回転ファイルは、ファイルの長さに沿って螺旋状となる１つまたは複数のフルートを有する。１つまたは複数のフルートの直径は、シャンク部分と先端部分の間の少なくとも１つのフルート領域が、シャンク部分から先端部分への直線状テーパよりも小さい直径を有するように、ファイルのシャンク部分内の第１の直径からファイルの先端部分内のより小さい直径へと、不均一なやり方でテーパ状になる。フルートはまた、ランド付けすることができ、ランドの幅は、ファイルの長さに沿って変えることができる。特に、中間領域内のランドの幅は、先端またはシャンク部分内の幅よりも幅広である。

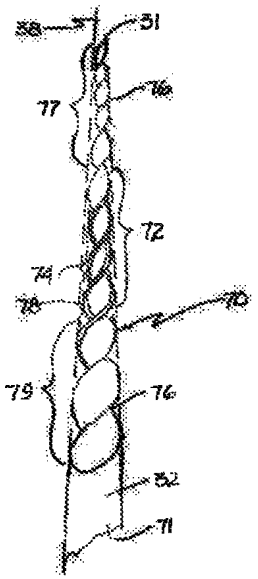

【特許請求の範囲】
【請求項１】
歯内の根管を形成し切り開くための改善された歯内治療用機器であって、前記ファイルの長さに沿って螺旋状になる１つまたは複数のフルートを有する回転ファイルを備え、前記１つまたは複数のフルートが、前記ファイルのシャンク端部にて第１の外径を、前記ファイルの先端にて第２のより小さい外径を有し、前記第１および第２の外径が、ファイルのシャンク部分と先端部分との間の直線状のテーパラインと一致し、前記ファイルの前記シャンク部分と前記先端部分との間に位置する中間部分に沿った前記フルートの前記外径が、前記第１の直径より小さく、前記機器がさらに、前記１つまたは複数のフルートの前縁上の切刃を備え、前記改善が、前記シャンクと前記先端部分との間の前記直線状のテーパラインよりも小さいフルート直径を有する、前記中間部分内の少なくとも１つの領域を含むことを特徴とする改善された歯内治療用機器。
【請求項２】
前記フルートが、ランド付きフルートであることを特徴とする請求項１に記載の改善された歯内治療用機器。
【請求項３】
前記中間部分内の前記フルート上のランドが、前記シャンク部分または先端部分内のランドの幅より大きい幅を有することを特徴とする請求項２に記載の改善された歯内治療用機器。
【請求項４】
前記中間部分内の２つまたは複数の領域が、前記シャンク部分と前記先端部分との間の前記直線状のテーパラインよりも小さいフルート直径を有し、前記２つまたは複数の領域が、より大きい直径を有する中間フルートによって分割されることを特徴とする請求項１に記載の改善された歯内治療用機器。
【請求項５】
前記フルートが、ランド付きフルートであることを特徴とする請求項４に記載の改善された歯内治療用機器。
【請求項６】
前記中間部分内の１つまたは複数の前記フルート上の前記ランドが、前記シャンク部分または先端部分内の前記ランドの幅より大きい幅を有する直線状のテーパラインよりも、小さい直径を有することを特徴とする請求項５に記載の改善された歯内治療用機器。
【請求項７】
より大きい直径を有する前記中間フルートが、前記直線状のテーパラインと一致することを特徴とする請求項４に記載の改善された歯内治療用機器。
【請求項８】
歯内の根管を形成し切り開くためのテーパ状の歯内治療用回転ファイルであって、前記ファイルの長さに沿って螺旋状になる１つまたは複数のフルートを備え、前記１つまたは複数のフルートの直径は、前記シャンク部分と前記先端部分との中間の少なくとも１つのフルート領域が、前記シャンク部分から前記先端部分への直線状テーパよりも小さい直径を有するように、前記ファイルのシャンク部分の第１の直径から前記ファイルの先端部分内のより小さい直径へと、非均一なやり方でテーパ状になることを特徴とする歯内治療用回転ファイル。
【請求項９】
前記フルートは、ランド付きフルートであることを特徴とする請求項８に記載の歯内治療用回転ファイル。
【請求項１０】
前記中間部分内の前記フルート上のランドが、前記シャンク部分または先端部分内のランドの幅より大きい幅を有することを特徴とする請求項９に記載の歯内治療用回転ファイル。
【請求項１１】

前記中間部分内の２つまたは複数の領域が、前記シャンク部分と前記先端部分との間の前記直線状テーパよりも小さいフルート直径を有し、前記２つまたは複数の領域が、より大きい直径を有する中間フルートによって分割されることを特徴とする請求項８に記載の歯内治療用回転ファイル。

【請求項１２】

前記フルートが、ランド付きフルートであることを特徴とする請求項１１に記載の改善された歯内治療用機器。

【請求項１３】

前記中間部分内の１つまたは複数の前記フルート上の前記ランドが、前記シャンク部分または先端部分内の前記ランドの幅より大きい幅を有する直線状のテーパラインよりも、小さい直径を有することを特徴とする請求項１２に記載の改善された歯内治療用機器。

【請求項１４】

より大きい直径を有する前記中間フルートが、前記直線状のテーパと一致することを特徴とする請求項１３に記載の改善された歯内治療用機器。

【請求項１５】

前記ファイルの前記先端部分が、前記ファイルのフルート付けされた長さの２５パーセントから５０パーセントを含み、前記先端部分と前記シャンク部分の中間の前記フルート付き領域が、前記ファイルのフルート付けされた長さの５０パーセントから７５パーセントを含むことを特徴とする請求項８に記載の改善された歯内治療用機器。

【発明の詳細な説明】

【技術分野】

【０００１】

本出願は、２００５年７月２８日出願の米国特許仮出願第６０／７０３，７６６号明細書の利益を主張する。

【背景技術】

【０００２】

歯内治療学は、歯内の根管の病的状態の診断および治療に関する、歯科学の専門の１つである。死にかけの、または死んだ歯髄組織を有する歯の歯内治療では、図１に示すように、治療する歯科医が、歯の内部空間内への開口部を準備することが必要であり、その空間は、髄室と呼ばれ、そこから根管の通路が根管口にて、患者の顎内部で歯を支持する各歯根内へと分岐する。歯科医は、小さい歯内治療用ファイルを、歯内の各管内を通し、その終点または根尖口へと進ませた後に、より大きいファイルを用いて、根管口の高さにて管の最大直径を有し、根尖口にて最小直径を有するテーパ形状を備えるように、管を準備しなければならない。図２は、歯の管内にある、０．０２ｍｍ／ｍｍのテーパ状のＫファイルを示す。典型的なＫ型ファイルのセットでは、テーパは、全てのファイル上で、長さ１６ｍｍの標準切削フルートにわたり０．３２ｍｍであり、または、フルートの長さ１ｍｍ毎にテーパが０．０２ｍｍである。このテーパは、標準ＩＳＯ（国際標準化機構）テーパと呼ばれることがある。これらのファイルセットは、同一のテーパを有するが、多くのサイズとなる。ファイルを特徴付けるサイズ番号２５（図２の右上部分に示す）は、１００分の１ミリ単位のファイルの先端直径であり、ファイルの大きい端部における直径は、この先端直径よりも０．３２ｍｍ大きい。完全なセットは、０６、０８、１０、１５、２０、２５、３０、３５、４０、４５、５０、５５、６０、７０、８０、９０、１００、１１０、１２０、１３０、および１４０の先端サイズを有するファイルを備えることになり、０８から６０のファイルサイズが、手順において通常使用される。製造業者によっては、いくつかのハーフサイズまたは非標準サイズも製作する。

【０００３】

根管の形成は、全て実質的に同じ比較的小さい（０．２ｍｍ／ｍｍ）テーパを有するが異なる先端直径を有する、ステンレス鋼のハンドファイル（ｈａｎｄ　ｆｉｌｅ）を使用することによって、１９００年代前半から実現されてきたが、多くの異なるファイルサイズ、多くの手順ステップ、および一貫した結果に到達するための多大な訓練を必要とする

。１９８０年代後半には、図３に示され、また特許文献１に記載されるような、より大きいテーパの形成ファイルを製作するために、形状記憶、極度の柔軟性、および際だった強度を有する新種のニッケルチタン合金が使用され、根管の形成を行うやり方を完全に変えた。ニッケルチタンの柔軟性は、ステンレス鋼よりも高かったため、より大きいテーパのファイルを、根管内で一般的に遭遇する湾曲部の周りで屈曲させることが可能であり、強度が加えられたため、この合金で製作されたファイルは、ステンレス鋼ファイルで一般的であったような破断を伴わずに、歯科用ハンドピース内で使用することができた。

【０００４】

この改善によって、より少ない機器を用いて実現される、より一貫し、より理想的に形成された管がもたらされ、必要とされる手順ステップがより少なくなり、結果的に、かかる時間がはるかに短く、歯科医が要求される訓練および経験が大幅に少なくなった。しかし、これらの回転切削機器は、主にそれらが根管壁を非常に急速に切削するということによる、それら自体の一連の問題をもっていた。ほとんどの根管は、それらの長さに沿っていくらかの大きさの湾曲を有するので、回転切削機器の設計における課題は、それらの切削フルートのジオメトリが中心となった。というのも、回転切削機器が、歯根を作る硬組織（象牙質）内を適切に切削するが、管の逸脱４９によって図５に示すように、治療される管の本来の通路をファイルが明らかに変化させるほど象牙質を有効に切削しないことが、決定的に重要であったからである。

【０００５】

作り出された最も安全なフルート設計のうちの１つは、図６および図７に示すように、螺旋状フルート空間が切削されて刃先が作り出された後に、テーパ状のニッケルチタンブランクの、本来の周縁の狭い部分が元のまま残される、Ａｒｐａｉｏ（特許文献２参照）によって説明されるようなランド付きフルートであった。ランドは、形成中に切削される管壁に対して中立的なすくい角を有し、かつ、ランドが管壁に乗るとき、ファイルが管内へとねじ込まれ、または管路を移動させる（変化させる）ことを妨げたため、刃先の強烈さが低減された。ランドの幅は、ファイル毎に変え、機器の切削挙動を、より強烈に、またはより強烈でなくすることができ、あるいは、ランドの幅は、ファイルの長さに沿って、より大きいシャンク端部からファイル先端へと変えることができた（たとえば、特許文献１参照）。

【０００６】

ランドの幅が増大される場合、ランドは、形成手順中の管路の移動防止に関してより安全になるが、切削がより遅くなり、ファイルが管の湾曲の周りを回転する度に蓄積されるサイクル疲労により、破断の可能性が上昇する。ランドが狭くされると、形成の目的で必要とされる回転数がより少ないので、破断の可能性が低減されるが、湾曲した管路が変化する可能性が高まる。本発明者の特許文献１に記載されるように、ファイルのより大きいシャンク端部にてより狭く、先端に近づくにつれて相対的により広くなるランド幅を有する試作品が製作されたとき、ファイルは、一貫した最適化されたランド幅をそれらの長さに沿って有するものよりも、大幅に速くは切削しなかったが、歯根中央部の移動が、許容不可能なレベルに増大した。

【０００７】

回転ファイルの使用中に遭遇する、切削効率を低減させる別の問題は、ファイルがその長さ全体に沿って動かなくなり、「テーパロック」と呼ばれるものを生み出すことである。テーパロックは、削りナイフブレード（ｗｈｉｔｔｌｉｎｇ　ｋｎｉｆｅ　ｂｌａｄｅ）がその長さに沿って長く係合しすぎる場合に生じるものと同様である。刻まれる木片による、切削への抵抗が生じる。テーパロックが生じるとき、臨床医は、ファイルを管内へとさらに切り込ませるために、ファイル上に下向きの圧力を加えたくなる。しかしこれは、機器の破断の主な原因である。現在、あるサイズのファイルがテーパロックにより失速した後に、根管内へとさらに切り込む唯一の方法は、それを取り外し、より狭いまたはより幅広のテーパのファイルに切り換え、その新しい機器を管内に再び導入することであり、新しい機器は、その長さ全体より短い長さに沿って象牙質に係合し、その結果、以前の

機器よりも遠くまで前進する。

【０００８】

【特許文献１】米国特許第５，９２１，７７５号明細書

【特許文献２】米国特許第４，９３４，９３４号明細書

【発明の開示】

【発明が解決しようとする課題】

【０００９】

本明細書で説明される本発明は、特に、これらのファイルが湾曲した管内で使用されるとき、切削効率と、本来の管路の維持との間の動的なバランスの、劇的な改善をもたらす。

【課題を解決するための手段】

【００１０】

本発明は、テーパロックを大幅に減少させ、切削効率を上昇させ、管の本来の通路を維持するのにも役立つ、改善された回転ファイルフルートのジオメトリを有する。これは、ファイルの長さに沿った、多数の高さの輪郭、および多数のランド幅の変化を、生み出すことによって実現される。好ましい実施形態では、新しい機器の設計は、その中央においてわずかに小さく輪郭付けされた部分、すなわち、より狭いウェスト部を有し、先端およびシャンク領域にて、より細いランドを有し、小さく輪郭付けされた中央領域内にて、より広いランドを有する。

【発明を実施するための最良の形態】

【００１１】

図１は、エナメル質１１、象牙質１２、髄室１３、および、歯髄１５を内部に有する根管空間１４から構成される、ヒトの歯１０を示す。歯は、歯肉組織１７によって覆われた歯槽骨１６内に埋め込まれている。

【００１２】

図２は、従来技術のファイル２４を使用して、髄室１３内にアクセス空腔２１が準備され、かつ根管２３がテーパ状の形に形成された後の、歯１０を示す。

【００１３】

図３は、先端３１、シャンク３２、およびハンドル３３を有する、別の従来技術の形成ファイル３０を示し、ファイルは、切削フルート３４と、０．０８ｍｍ／ｍｍのテーパ３８を有する、テーパ部分３５とを備える。

【００１４】

図４は、図３のハンドル３３の一代替形態として、シャンク３２を有するラッチグループ取付部３６を示す。

【００１５】

図５は、髄室１３内へのアクセス空腔２１を有する、歯槽骨１６内の臼歯４０を示し、根管２３が、髄室１３から離れて分岐する。近心根４６内に、ランド付きフルートをもたないテーパ状ファイル２４によって、湾曲した管２３が形成されており、近心根管２３の通路が、根壁４８を穿孔する点まで直線状にされる。感染した歯槽骨４９が、歯根穿孔部の隣に見られる。これは、この事故に共通する結果である。

【００１６】

図６は、ワイヤブランクの本来の周縁５１、フルート空間切抜部５２、および残りのランド５３を有する、従来技術のランド付きフルート５０の断面を示す。

【００１７】

図７は、先端３１、シャンク３２、ラッチグリップ取付部３６、フルート空間５２、および等幅にランド付けされたフルート５３を備える、図６のファイル５０の側面図である。

【００１８】

出願人は、フルートのジオメトリを変化させることによって、改善された回転ファイルを製作することができ、テーパロックの大幅な減少、切削効率の上昇、および、管の本来

の通路を維持しながら根壁内への切り込みを最小化しまたはなくす能力の改善が、もたらされることを発見してきた。従来技術の装置は、ファイルの長さに沿って、均一なテーパを有する。出願人の以前の特許において開示された改善は、ランドの幅を変えることであった。本明細書で説明したファイル機能のさらなる改善をもたらすために、テーパの長さに沿って多数の高さまたは輪郭を有し、ファイルの長さに沿って多数のランド幅の変化を有する、回転ファイルが作り出されてきた。好ましい実施形態では、新しい機器の設計は、ファイルの長さの中央にあるわずかに小さく輪郭付けされた部分、すなわちより狭いウェスト部を有し、ファイルの先端およびシャンク領域にて、より細いランドを有し、より狭く輪郭付けされた中央ウェスト領域内で、より幅広のランドを有する。

【００１９】

ファイルのわずかにより狭い「ウェスト部」は、ファイルの先端およびシャンク上の輪郭がより高くなる結果として、テーパロックを減少させる。この構成の機器を使用することによって、以前に必要とされていた、それぞれ異なるテーパを有する３つまたは４つの機器の代わりに単一の機器を使用して、根管形成手順で必要とされる全ての形状を切削する能力が、開業医にもたらされる。

【００２０】

この幅可変ランドのジオメトリは、先端およびシャンク領域にてブレード部分がより鋭くなる結果として、より最適な切削効率をもたらし、一方、ファイルの中央領域内のより幅広のランドは、湾曲した管の中間点での管の直線化を妨げ、または最小化する。根管が大きく湾曲している可能性があるファイルの先端にて、ブレードを鋭くすることは、そのより狭いファイル部分の柔軟性が本質的により高いので安全であること、および、ファイルのより剛性の高いシャンク端部にて、ブレードを鋭くすることは、歯根の歯冠部アスペクト（ｃｏｒｏｎａｌ　ａｓｐｅｃｔ）が根管のより先端の領域よりも厚くより直線的であるので安全であるということを、これらのファイルの使用が示してきた。

【００２１】

図８は、ランド付きフルートファイル７０の第１の実施形態を示し、ファイル７０は、先端領域７７の端部にある先端３１、ならびに、ファイル７０のハンドル端部７１へと向かう、シャンク３２および隣接するシャンク部分７９を有する。中央領域７２が、先端部分７７と、シャンク部分７９との間に配置される。より狭いウェスト輪郭７４が、中央領域７２内に配置される。先端領域７７およびシャンク領域７９が、細くランド付けされたフルート７６を有する一方、中央領域７２は、より幅広にランド付けされたフルート７８を有する。

【００２２】

図９は、ランド付けされたフルートファイル８０の第２の実施形態であり、ファイル８０は、先端領域８１と、ファイル８０のフルート付けされた長さに沿って、先端３１からファイルのほぼ４分の１から２分の１の長さを含む、中間領域８２と、ファイル８０のフルート付けされた長さに沿って、先端３１からファイルのほぼ２分の１から４分の３の長さを含む、中央領域８３と、ファイル８０のシャンク３２に隣接するシャンク領域８４とを有する。この実施形態は、中間領域８２、中央領域８３、およびシャンク領域８４内で、縮小された輪郭８６（直線状テーパ３８からのファイルの直径の縮小）を備え、先端、中間部分と中央部分との間、およびファイルのシャンク端部にて、拡大された輪郭８７（縮小された領域からのファイルの直径の拡大）を備える。この実施形態もまた、シャンクおよび先端領域にて細いフルートランド８８を、中間および中央領域においてより幅広のランド８９を有する。

【００２３】

図１０は、ファイル９０を備える、本発明の特徴を組み込む第３の実施形態を示し、ファイル９０は、ランドを備えず、先端領域９１、中央領域９２、およびシャンク領域９３を有する。第２の実施形態と同様、この実施形態は、中央領域９２内に、縮小された輪郭９４を、先端領域９１およびシャンク領域９３内に、拡大された輪郭９６を有する。

【００２４】

図１１は、ランドをもたないファイル１００を備える、本発明の特徴を組み込むさらなる実施形態を示す。図９の実施形態と同様、この実施形態は、縮小された輪郭を有する３つの部分１０４と、それらの間の、隣接部分と比べて拡大された輪郭１０５を有する部分とを備える。

【００２５】

本発明を、４つの実施形態を用いて図示および説明するが、より低い輪郭を有する１つまたは３つの領域、ならびに、より高い輪郭を有する端部および中間領域（より低い輪郭部分の間の領域）を備える図示の実施形態に、本発明を限定することは意図されない。ファイルは、ファイルの長さに沿って拡散された、２つの縮小された輪郭、または４つ以上のより低い（縮小された直径の）領域とともに形成することができる。本発明の基本的な特徴は、直線的な縁部がファイルの長さに沿って配置される場合、ランドが直線的な縁部に接触しない、より低い部分が存在することになるということである。２組のファイルが示され、第１の組は、縮小された輪郭領域内の幅広のランドと、高くなった輪郭領域内のより細いランドを有し、第２の組は、ランドをもたない。ただし、１つまたは複数の部分内でランドをもたず、別の部分内でランドを有するファイルを製作することもできることも、意図される。本発明の特徴を組み込む典型的なファイルは、ファイルのテーパに沿った直線から約０．０００１インチ（０．０００２５４ｃｍ）から約０．００４インチ（０．０１０１６ｃｍ）縮小された直径を有する、縮小された輪郭を有することになり、縮小された輪郭のこの領域の幅（ファイルの長さに沿った距離）は、フルート１つ分から、ファイルのフルート付けされた長さの約２分の１となる。フルート上のランドの幅は、通常、０（ランド無し）から約０．００４インチ（０．０１０１６ｃｍ）とすることができる。ただし、縮小された輪郭領域の、より大きい深さおよび長さ、または、多数の縮小された輪郭領域が存在する場合のこれらの領域の長さの合計は、本発明の範囲外ではない。より大きいランド幅を使用することもできるが、ランド幅がさらに増大されるにつれて、ファイルの切削能力は一般に低減される。

【図面の簡単な説明】

【００２６】

【図１】個人の顎内の歯の断面図である。

【図２】従来技術の歯内治療手順を示す、図１の歯の断面図である。

【図３】従来技術のニッケルチタンファイルの例を示す図である。

【図４】ファイルの従来技術のラッチグループ取付部を示す図である。

【図５】管壁の許容不可能な切削を示す、手順中の歯の断面図である。

【図６】従来技術の装置の形状を示す断面図である。

【図７】図６の従来技術の装置を示す側面図である。

【図８】本発明の特徴を組み込むファイルを示す側面図である。

【図９】本発明の特徴を組み込むファイルの第２の実施形態を示す側面図である。

【図１０】本発明の特徴を組み込むファイルの第３の実施形態を示す側面図である。

【図１１】本発明の特徴を組み込むファイルの第４の実施形態を示す側面図である。

【図１】

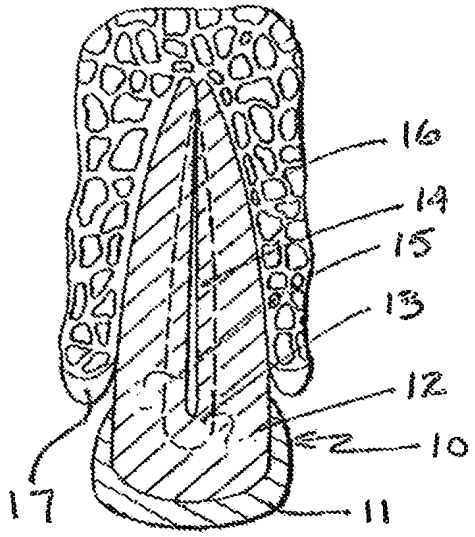

従 来 技 術

【図２】

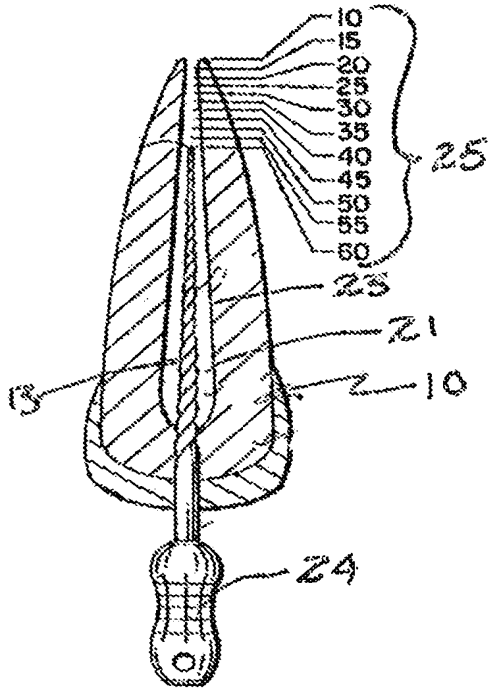

従 来 技 術

【図３】

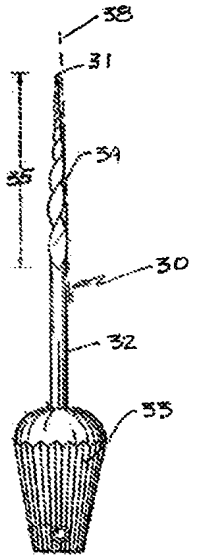

従 来 技 術

【図４】

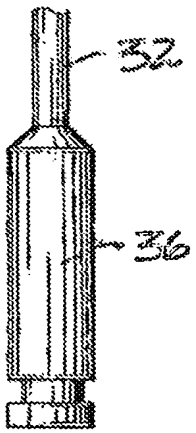

従 来 技 術

【図５】

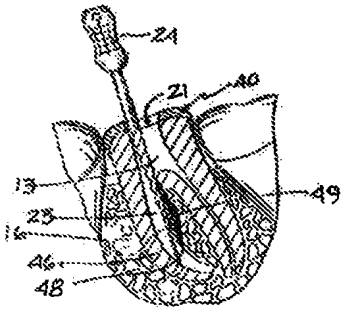

従来技術

【図６】

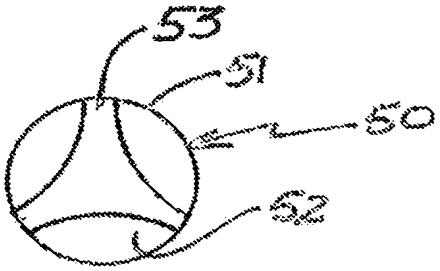

【図７】

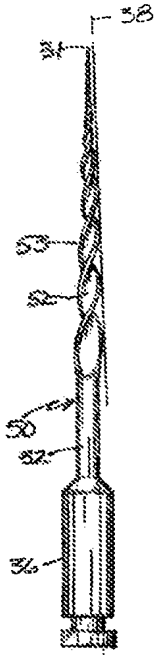

従来技術

従来技術

【図８】

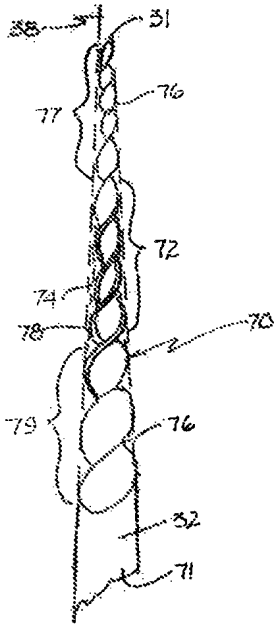

【図９】

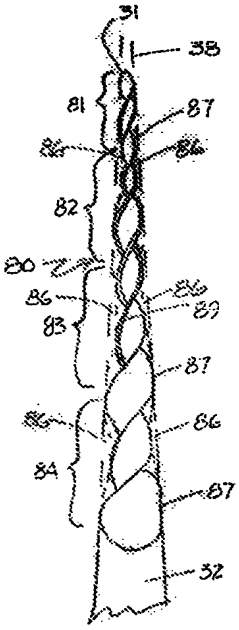

【図１０】

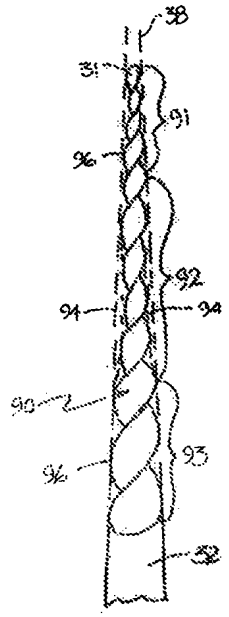

【図１１】

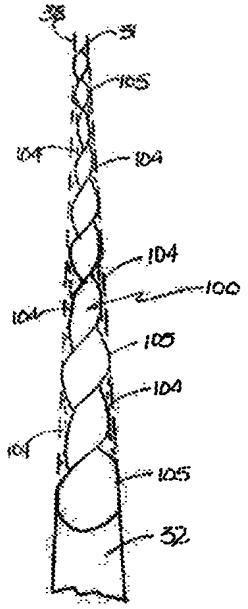

【手続補正書】
【提出日】平成20年3月28日（2008.3.28）
【手続補正１】
【補正対象書類名】特許請求の範囲
【補正対象項目名】全文
【補正方法】変更
【補正の内容】
【特許請求の範囲】
【請求項１】
歯内の根管を形成し切り開くための改善された歯内治療用機器であって、ファイルの長さに沿って螺旋状になる１つまたは複数のフルートを有する前記ファイルを備え、前記１つまたは複数のフルートが、前記ファイルのシャンク端部にて第１の外径を、前記ファイルの先端にて第２のより小さい外径を有し、前記第１および第２の外径が、前記ファイルのシャンク部分と先端部分との間の直線状のテーパラインと一致し、前記ファイルの前記シャンク部分と前記先端部分との間に位置する中間部分に沿った前記フルートの前記外径が、前記第１の直径より小さく、前記機器がさらに、前記１つまたは複数のフルートの前縁上の切刃を備え、前記シャンク部分および前記先端部分内の前記フルートが、ランド付きフルート、ランド無しフルート、またはそれらの組合せであり、前記改善が、前記シャンク部分と前記先端部分との間の前記直線状のテーパラインよりも小さいフルート直径を有する前記中間部分内の少なくとも１つの領域を含み、前記中間分内の少なくとも１つの領域内の前記フルートが、ランド付きフルートであり、前記中間分内の前記１つの領域内の前記フルート上の全てのランドが、前記シャンク部分または先端部分内の前記ランドの幅よりも大きい幅を有することを特徴とする改善された歯内治療用機器。
【請求項２】
前記中間部分内の２つまたは複数の領域が、前記シャンク部分と前記先端部分との間の

前記直線状のテーパラインよりも小さいフルート直径を有し、前記２つまたは複数の領域が、より大きい直径を有する中間フルートによって分割されることを特徴とする請求項１に記載の改善された歯内治療用機器。

【請求項３】

より大きい直径を有する前記中間フルートが、前記直線状のテーパラインと一致することを特徴とする請求項２に記載の改善された歯内治療用機器。

【請求項４】

歯内の根管を形成し切り開くためのテーパ状の歯内治療用ファイルであって、前記ファイルの長さに沿って螺旋状になる１つまたは複数のフルートを備え、前記１つまたは複数のフルートの直径は、前記シャンク部分と前記先端部分との間の少なくとも１つの中間フルート領域が、前記シャンク部分から前記先端部分への直線状テーパよりも小さい縮小された直径を有するように、前記ファイルのシャンク部分の第１の直径から前記ファイルの先端部分内のより小さい直径へと、非均一なやり方でテーパ状になり、前記シャンク部分および先端部分内の前記フルートが、ランド付きフルート、ランド無しフルート、またはそれらの組合せであり、少なくとも前記中間フルート領域内の前記フルートが、ランド付きフルートであり、前記中間フルート領域内の前記フルート上の前記ランドが全て、前記シャンク部分または先端部分内の前記ランドの幅よりも大きい幅を有することを特徴とする歯内治療用ファイル。

【請求項５】

前記中間部分内の２つまたは複数の領域が、前記シャンク部分と前記先端部分との間の前記直線状テーパよりも小さいフルート直径を有し、前記２つまたは複数の領域が、より大きい直径を有する中間フルートによって分割されることを特徴とする請求項４に記載の歯内治療用ファイル。

【請求項６】

より大きい直径を有する前記中間フルートが、前記直線状のテーパと一致することを特徴とする請求項５に記載の歯内治療用ファイル。

【請求項７】

前記ファイルの前記先端部分が、前記ファイルのフルート付けされた長さの２５パーセントから５０パーセントを含み、前記先端部分と前記シャンク部分との中間の前記フルート付き領域が、前記ファイルのフルート付けされた長さの５０パーセントから７５パーセントを含むことを特徴とする請求項４に記載の歯内治療用ファイル。

【請求項８】

前記シャンク部分および前記先端部分内の少なくともいくつかの前記フルート、または、前記シャンク部分あるいは前記先端部分内の前記フルートの少なくともいくつかが、切刃に接近する幅を有することを特徴とする請求項１に記載の改善された歯内治療用機器。

【請求項９】

前記シャンク部分および前記先端部分内の、少なくともいくつかの前記フルート、または、前記シャンク部分あるいは前記先端部分内の前記フルートの少なくともいくつかが、切刃に接近する幅を有することを特徴とする請求項４に記載のテーパ状歯内治療用ファイル。

【請求項１０】

歯内の根管を形成し切り開くためのテーパ状の歯内治療用ファイルであって、前記ファイルの長さに沿って螺旋状になる１つまたは複数のフルートを備え、前記１つまたは複数のフルートの直径は、前記シャンク部分と前記先端部分との中間の少なくとも１つのフルート領域が、前記シャンク部分から前記先端部分への直線状テーパよりも小さい直径を有するように、前記ファイルのシャンク部分の第１の直径から前記ファイルの先端部分内のより小さい直径へと、不均一なやり方でテーパ状になり、前記中間部分内の前記フルートが、ランド付きフルートであり、前記シャンク部分または先端部分内の前記フルートが、ランドをもたず、前記中間部分内の前記フルート上の前記ランドが全て、前記シャンク部分または先端部分内の前記フルートの頂面の幅よりも大きい幅を有することを特徴とする

歯内治療用回転ファイル。

【請求項１１】

前記中間部分内の２つまたは複数の領域が、前記シャンク部分と前記先端部分との間の前記直線状テーパよりも小さいフルート直径を有し、前記２つまたは複数の領域が、より大きい直径を有する中間フルートによって分割されることを特徴とする請求項１０に記載のテーパ状歯内治療用ファイル。

【請求項１２】

より大きい直径を有する前記中間フルートが、前記直線状のテーパと一致することを特徴とする請求項１１に記載のテーパ状歯内治療用ファイル。

【請求項１３】

歯内の根管を形成し切り開くためのテーパ状の歯内治療用ファイルであって、前記ファイルの長さに沿って螺旋状になる１つまたは複数のフルートを備え、前記１つまたは複数のフルートの直径は、前記シャンク部分と前記先端部分との中間の少なくとも１つのフルート領域が、前記シャンク部分から前記先端部分への直線状テーパよりも小さい直径を有するように、前記ファイルのシャンク部分の第１の直径から前記ファイルの先端部分内のより小さい直径へと、非均一なやり方でテーパ状になり、前記フルートがランドをもたないことを特徴とする歯内治療用ファイル。

【国際調査報告】

INTERNATIONAL SEARCH REPORT

International application No
PCT/US2006/029262

A. CLASSIFICATION OF SUBJECT MATTER
INV. A61C5/02

According to International Patent Classification (IPC) or to both national classification and IPC

B. FIELDS SEARCHED

Minimum documentation searched (classification system followed by classification symbols)
A61C

Documentation searched other than minimum documentation to the extent that such documents are included in the fields searched

Electronic data base consulted during the international search (name of data base and, where practical, search terms used)
EPO-Internal

C. DOCUMENTS CONSIDERED TO BE RELEVANT

Category*	Citation of document, with indication, where appropriate, of the relevant passages	Relevant to claim No.
X	US 6 074 209 A (JOHNSON WILLIAM B [US]) 13 June 2000 (2000-06-13) the whole document	1-15
X	US 2004/023186 A1 (MCSPADDEN JOHN T [US]) 5 February 2004 (2004-02-05) the whole document	1-15
X	EP 0 501 255 A (MAILLEFER AUGUSTE SA [CH]) 2 September 1992 (1992-09-02) the whole document	1,8,15
X	US 5 658 145 A (MAILLEFER PIERRE-LUC [CH] ET AL) 19 August 1997 (1997-08-19) the whole document	1,8,15
X	US 6 409 506 B1 (GRAYBILL LONNIE M [US]) 25 June 2002 (2002-06-25) the whole document	1,8,15

☐ Further documents are listed in the continuation of Box C. ☒ See patent family annex.

* Special categories of cited documents:

"A" document defining the general state of the art which is not considered to be of particular relevance
"E" earlier document but published on or after the international filing date
"L" document which may throw doubts on priority claim(s) or which is cited to establish the publication date of another citation or other special reason (as specified)
"O" document referring to an oral disclosure, use, exhibition or other means
"P" document published prior to the international filing date but later than the priority date claimed

"T" later document published after the international filing date or priority date and not in conflict with the application but cited to understand the principle or theory underlying the invention
"X" document of particular relevance; the claimed invention cannot be considered novel or cannot be considered to involve an inventive step when the document is taken alone
"Y" document of particular relevance; the claimed invention cannot be considered to involve an inventive step when the document is combined with one or more other such documents, such combination being obvious to a person skilled in the art
"&" document member of the same patent family

Date of the actual completion of the international search	Date of mailing of the international search report
23 November 2006	30/11/2006

Name and mailing address of the ISA/	Authorized officer
European Patent Office, P.B. 5818 Patentlaan 2 NL - 2280 HV Rijswijk Tel. (+31-70) 340-2040, Tx. 31 651 epo nl, Fax: (+31-70) 340-3016	Salvatore, Claudio

Form PCT/ISA/210 (second sheet) (April 2005)

INTERNATIONAL SEARCH REPORT

Information on patent family members

International application No
PCT/US2006/029262

Patent document cited in search report		Publication date	Patent family member(s)			Publication date
US 6074209	A	13-06-2000	CA	2346671	A1	13-04-2000
			EP	1119310	A1	01-08-2001
			JP	2002526156	T	20-08-2002
			WO	0019934	A1	13-04-2000
US 2004023186	A1	05-02-2004	NONE			
EP 0501255	A	02-09-1992	CH	685097	A5	31-03-1995
			JP	3163155	B2	08-05-2001
			JP	5092013	A	16-04-1993
			US	5219284	A	15-06-1993
US 5658145	A	19-08-1997	CH	691789	A5	31-10-2001
			DE	69621755	D1	18-07-2002
			DE	69621755	T2	06-03-2003
			EP	0780099	A2	25-06-1997
			JP	9253092	A	30-09-1997
US 6409506	B1	25-06-2002	AU	5578801	A	12-11-2001
			WO	0182819	A1	08-11-2001

Form PCT/ISA/210 (patent family annex) (April 2005)

フロントページの続き

(81)指定国 AP(BW,GH,GM,KE,LS,MW,MZ,NA,SD,SL,SZ,TZ,UG,ZM,ZW),EA(AM,AZ,BY,KG,KZ,MD,RU,TJ,TM),EP(AT,BE,BG,CH,CY,CZ,DE,DK,EE,ES,FI,FR,GB,GR,HU,IE,IS,IT,LT,LU,LV,MC,NL,PL,PT,RO,SE,SI,SK,TR),OA(BF,BJ,CF,CG,CI,CM,GA,GN,GQ,GW,ML,MR,NE,SN,TD,TG),AE,AG,AL,AM,AT,AU,AZ,BA,BB,BG,BR,BW,BY,BZ,CA,CH,CN,CO,CR,CU,CZ,DE,DK,DM,DZ,EC,EE,EG,ES,FI,GB,GD,GE,GH,GM,HN,HR,HU,ID,IL,IN,IS,JP,KE,KG,KM,KN,KP,KR,KZ,LA,LC,LK,LR,LS,LT,LU,LV,LY,MA,MD,MG,MK,MN,MW,MX,MZ,NA,NG,NI,NO,NZ,OM,PG,PH,PL,PT,RO,RS,RU,SC,SD,SE,SG,SK,SL,SM,SY,TJ,TM,TN,TR,TT,TZ,UA,UG,US,UZ,VC,VN,ZA,ZM,ZW

Espacenet

Bibliographic data: WO2012038437 (A1) — 2012-03-29

ENDODONTIC INSTRUMENT HAVING, ALONG A CUTTING PORTION, A SUPPORTING CORE EXTENDING ALONG A HELICAL PATH

Inventor(s): EUVRARD HUBERT [FR]; PERNOT JACQUES [FR]; VULCAIN JEAN-MARIE [FR]; COLON PIERRE [FR] ± (EUVRARD, HUBERT, ; PERNOT, JACQUES, ; VULCAIN, JEAN-MARIE, ; COLON, PIERRE)

Applicant(s): NEOLIX [FR]; EUVRARD HUBERT [FR]; PERNOT JACQUES [FR]; VULCAIN JEAN-MARIE [FR]; COLON PIERRE [FR] ± (NEOLIX, ; EUVRARD, HUBERT, ; PERNOT, JACQUES, ; VULCAIN, JEAN-MARIE, ; COLON, PIERRE)

Classification: - international: *A61C5/02*
- cooperative: A61C5/42

Application number: WO2011EP66341 20110920 Global Dossier

Priority number(s): FR20100003744 20100921

Also published as: FR2964852 (A1) FR2964852 (B1)

Abstract of WO2012038437 (A1)

The invention relates to an endodontic instrument used for working on a tooth canal, having a base from which an active portion for working on the canal extends longitudinally, said active portion being supported by a supporting core. Said instrument is characterized in that said supporting core extends along a helical path.

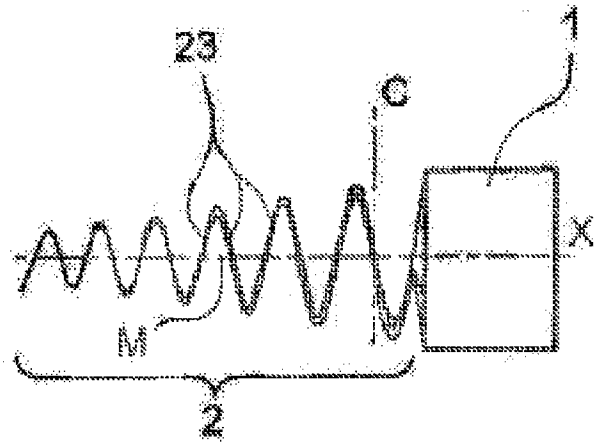

(12) DEMANDE INTERNATIONALE PUBLIÉE EN VERTU DU TRAITÉ DE COOPÉRATION EN MATIÈRE DE BREVETS (PCT)

(19) Organisation Mondiale de la Propriété Intellectuelle
Bureau international

(43) Date de la publication internationale
29 mars 2012 (29.03.2012)

PCT

(10) Numéro de publication internationale
WO 2012/038437 A1

(51) Classification internationale des brevets : *A61C 5/02* (2006.01)

(21) Numéro de la demande internationale : PCT/EP2011/066341

(22) Date de dépôt international : 20 septembre 2011 (20.09.2011)

(25) Langue de dépôt : français

(26) Langue de publication : français

(30) Données relatives à la priorité :
1003744 21 septembre 2010 (21.09.2010) FR

(71) Déposant *(pour tous les États désignés sauf US)* : **NEOLIX** [FR/FR]; 6 rue Léonard de Vinci, Maison de la Technopôle, F-53001 Laval (FR).

(72) Inventeurs; et
(75) Inventeurs/Déposants *(pour US seulement)* : **EUVRARD, Hubert** [FR/FR]; 6 chemin des Essarts, Les Torcols, F-25000 Besancon (FR). **PERNOT, Jacques** [FR/FR]; 21 chemin de Merey, F-25870 Vieilley (FR). **VULCAIN, Jean-Marie** [FR/FR]; 8 impasse Sainte-Croix, F-35500 Vitre (FR). **COLON, Pierre** [FR/FR]; 70 quai du Parc, F-94100 Saint Maur Des Fosses (FR).

(74) Mandataire : **SAINT-MARC-ETIENNE, Christophe**; Technopôle Atalante, 16B rue de Jouanet - BP 90333, F-35703 Rennes Cedex 7 (FR).

(81) États désignés *(sauf indication contraire, pour tout titre de protection nationale disponible)* : AE, AG, AL, AM, AO, AT, AU, AZ, BA, BB, BG, BH, BR, BW, BY, BZ, CA, CH, CL, CN, CO, CR, CU, CZ, DE, DK, DM, DO, DZ, EC, EE, EG, ES, FI, GB, GD, GE, GH, GM, GT, HN, HR, HU, ID, IL, IN, IS, JP, KE, KG, KM, KN, KP, KR, KZ, LA, LC, LK, LR, LS, LT, LU, LY, MA, MD, ME, MG, MK, MN, MW, MX, MY, MZ, NA, NG, NI, NO, NZ, OM, PE, PG, PH, PL, PT, QA, RO, RS, RU, RW, SC, SD, SE, SG, SK, SL, SM, ST, SV, SY, TH, TJ, TM, TN, TR, TT, TZ, UA, UG, US, UZ, VC, VN, ZA, ZM, ZW.

(84) États désignés *(sauf indication contraire, pour tout titre de protection régionale disponible)* : ARIPO (BW, GH, GM, KE, LR, LS, MW, MZ, NA, SD, SL, SZ, TZ, UG, ZM, ZW), eurasien (AM, AZ, BY, KG, KZ, MD, RU, TJ, TM), européen (AL, AT, BE, BG, CH, CY, CZ, DE, DK, EE, ES, FI, FR, GB, GR, HR, HU, IE, IS, IT, LT, LU, LV, MC, MK, MT, NL, NO, PL, PT, RO, RS, SE, SI, SK, SM, TR), OAPI (BF, BJ, CF, CG, CI, CM, GA, GN, GQ, GW, ML, MR, NE, SN, TD, TG).

[Suite sur la page suivante]

(54) Title : ENDODONTIC INSTRUMENT HAVING, ALONG A CUTTING PORTION, A SUPPORTING CORE EXTENDING ALONG A HELICAL PATH

(54) Titre : INSTRUMENT ENDODONTIQUE PRÉSENTANT, LE LONG D'UNE PORTION DE DÉCOUPE, UNE ÂME PORTEUSE S'ÉTENDANT SELON UNE TRAJECTOIRE HÉLICOÏDALE

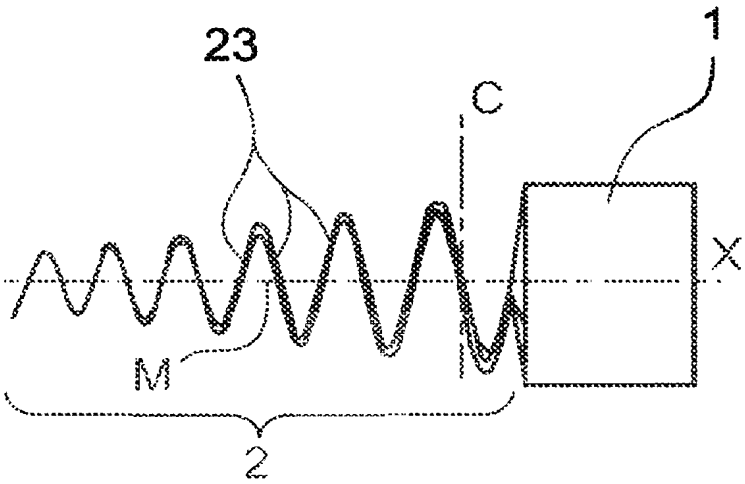

Fig. 1

(57) Abstract : The invention relates to an endodontic instrument used for working on a tooth canal, having a base from which an active portion for working on the canal extends longitudinally, said active portion being supported by a supporting core. Said instrument is characterized in that said supporting core extends along a helical path.

(57) Abrégé : L'invention concerne un instrument endodontique utilisé pour travailler un canal dans une dent, présentant une base à partir de laquelle s'étend longitudinalement une partie active de travail du canal portée par une âme porteuse, caractérisé en ce que ladite âme porteuse s'étend selon une trajectoire hélicoïdale.

WO 2012/038437 A1

Publiée :

— *avec rapport de recherche internationale (Art. 21(3))*

Instrument endodontique présentant, le long d'une portion de découpe, une âme porteuse s'étendant selon une trajectoire hélicoïdale.

Le domaine de l'invention est celui de la conception et de la fabrication d'instruments pour pratiquer les soins dentaires. Plus précisément, l'invention concerne les instruments endodontiques, utilisés pour réaliser un canal dans une racine de dent (ou canal radiculaire).

Lorsqu'une dent est affectée par une carie profonde, il est parfois nécessaire de dévitaliser la dent. Pour ce faire, il faut retirer de la dent et de la racine de la dent des tissus infectés, et mettre en forme un canal destiné à être obturé par une matière constituant de la Gutta ou autres pâtes d'obturation canalaire.

Pour réaliser ces opérations, on utilise des instruments endodontiques qui s'apparentent à des forets de petits diamètres, et qui permettent d'aléser et/ou découper la dentine de la racine de dent pour mettre en forme le canal destiné à recevoir de la Gutta ou autres pâtes d'obturation canalaire.

Ce traitement est donc réalisé de manière mécanisée et les instruments endodontiques sont, lors de leur conception, prévus pour présenter une dureté suffisante pour traverser la dentine qui est un matériau mi-dur, tout en présentant un certain degré de souplesse pour pouvoir prendre la forme interne de la racine de la dent. A cette fin, il est proposé depuis plusieurs années des instruments endodontiques réalisés en un alliage de nickel et de titane, en lieu et place des instruments réalisés à partir des fils d'acier.

De façon générale, les instruments endodontiques actuels sont fabriqués à partir d'une tige cylindrique sur laquelle une ou plusieurs découpes hélicoïdales sont taillées, traditionnellement par un procédé de meulage. Les surfaces de découpe génèrent à leur intersection une arête de découpe.

Avec des moyens classiques de fraisage ou de meulage, les découpes réalisées résultent de la conjugaison de mouvements simultanés de la rotation et de l'avance du fil (pièce à usiner) devant la meule ou la fraise. Les instruments ainsi usinés présentent dans leur section perpendiculaire à l'axe du fil une

géométrie connue prédéterminée par le cycle d'usinage (cercle, carré, polygone...). Les centres de toutes ces sections transversales définissent ensemble l'âme porteuse de l'arête de découpe le long de la portion de découpe de l'instrument. Il résulte de l'utilisation des moyens d'usinage classique (fraisage ou meulage) que cette âme porteuse s'étend de façon rectiligne et de façon confondue avec l'axe du fil constituant la pièce à usiner initiale.

Les instruments actuels nécessitent une grande vigilance et une dextérité précise de la part du praticien. En effet, avec les instruments endodontiques connus, deux phénomènes opposés peuvent survenir :

- soit l'arête de l'instrument endodontique glisse sur la matière de la dentine ;
- soit l'arête de l'instrument endodontique s'engage trop rapidement dans la matière de la dentine, ce qui conduit à un phénomène désigné par le terme de « survissage », à l'issue duquel l'instrument se coince dans la matière.

Dans les deux cas, l'usinage du canal ne s'opère pas correctement, voire ne se réalise pas du tout.

Il est à noter que dans le cas où l'instrument endodontique se coince dans la matière, il est fréquent que celui-ci vienne à casser. Or, la casse d'instrument endodontique à l'intérieur du canal se traduit par un surcoût d'exploitation important pour le praticien et à un risque pour la santé du patient. L'invention a notamment pour objectif de pallier ces inconvénients de l'art antérieur.

Plus précisément, l'invention a pour objectif de proposer un instrument endodontique qui soit plus efficace que ceux de l'art antérieur, et qui soit plus simple à utiliser pour le praticien.

L'invention a également pour objectif de fournir un tel instrument endodontique qui permette au praticien d'envisager des gains d'exploitation.

Ces objectifs, ainsi que d'autres qui apparaîtront par la suite, sont atteints grâce à l'invention qui a pour objet un instrument endodontique utilisé pour travailler un canal dans une dent, présentant une base à partir de laquelle s'étend

longitudinalement une partie active de travail du canal portée par une âme porteuse, caractérisé en ce que ladite âme porteuse s'étend selon une trajectoire hélicoïdale le long d'au moins une partie de ladite partie active.

En particulier, ces objectifs sont atteints grâce à un instrument utilisé pour aléser un canal dans une dent, présentant une base à partir de laquelle s'étend au moins une arête de découpe, ladite arête de découpe s'étendant longitudinalement le long d'une portion de découpe présentant une pointe à l'opposé de ladite base, ladite arête de découpe étant portée le long de ladite portion de découpe par une âme porteuse, caractérisé en ce que ladite âme porteuse s'étend selon une trajectoire hélicoïdale, le long d'au moins une partie de ladite partie active.

Ainsi, grâce à l'invention, on obtient un instrument endodontique susceptible de variations volumétriques dans sa partie active.

En effet, l'âme porteuse étant une hélice, l'instrument dans sa portion de découpe, est susceptible de connaître différentes déformations : allongement ou réduction de la longueur, extension et réduction radiale, courbure...

Il résulte de cette aptitude à la variation volumétrique qu'un instrument selon l'invention procure notamment les avantages suivants :

- un instrument selon l'invention évite les phénomènes de coincement, et permet le désengagement naturel de l'outil par une rétraction longitudinale en cas de forte contrainte sur la partie proximale (côté base de l'outil) ;
- cet effet de rétraction s'accompagne d'un élargissement de la partie haute et est obtenu par une rétraction de la forme extérieure avec la trajectoire de l'âme porteuse de l'outil (exemple : dans le cas d'un outil avec une arête de coupe hélicoïdale à droite, la courbe de l'âme porteuse aura son sens d'hélice à gauche) ;

- la variation relative (axiale et radiale) de l'instrument améliore l'évacuation des débris dentinaires et augmente l'efficacité du fluide irrigant ;
- l'effet de l'instrument s'apparente plus à un « grattage » ou à un fraisage, en comparaison de l'action des instruments endodontiques classiques qui s'apparentent à une simple découpe ;
- l'outil s'adapte à la morphologie du canal, variable et souvent complexe (ovoïde, dissymétrie, irrégulière, avec rétrécissements ou élargissements, courbures...) ; ainsi, la zone de contact est toujours maximale entre la ou les arêtes de découpe de l'instrument et la paroi du canal grâce à un ajustement permanent naturel de l'enveloppe dessinée par l'instrument en rotation sous l'effet des contraintes qui s'exercent sur l'instrument ;
- l'instrument selon l'invention effectue un curetage plus sélectif des tissus nécrosés, plus mous, grâce à une contrainte réduite opposée à l'instrument en comparaison aux tissus sains, plus durs, ce qui préserve de façon optimisée la forme du canal traité ;
- la présence possible de deux hélices (une hélice interne coïncidant avec l'âme porteuse et une hélice externe correspondant à l'arête de découpe), dans des directions identiques ou opposées, dans le sens de la rotation de l'instrument ou dans le sens opposé, permet d'agir sur la circulation des fluides, dans un sens entrant ou sortant (alésage, évacuation des débris, irrigation, compactage ...).

Selon une première variante de réalisation, ladite portion de découpe présente une pluralité de spires non jointives.

Selon une deuxième variante de réalisation, ladite portion de découpe présente une pluralité de spires jointives.

Dans l'un ou l'autre cas, ladite portion de découpe peut avantageusement présenter un évidement central.

Une telle caractéristique contribue à augmenter encore l'effet positif de l'instrument sur la circulation des fluides, dans un sens entrant ou sortant.

Selon une solution avantageuse, l'âme porteuse présente une section transversale dont la forme géométrique est une forme appartenant au groupe suivant : triangulaire, carrée, rectangulaire, polygonale, ovale, ou une combinaison de ces formes.

Avantageusement, lesdites spires présentent une section transversale qui va décroissante en allant de ladite base vers ladite pointe.

Selon un premier mode de réalisation, ladite trajectoire hélicoïdale s'étend autour d'un axe médian curviligne.

Selon un deuxième mode de réalisation, ladite trajectoire hélicoïdale s'étend autour d'un axe médian rectiligne.

Selon une solution avantageuse, ladite portion de découpe présente un diamètre externe constant.

On note que ladite portion de découpe peut présenter un diamètre externe évolutif selon une autre solution avantageuse.

Selon un mode de réalisation particulier, ladite portion de découpe présente une forme conique ou tronconique.

Selon un autre mode de réalisation particulier, ladite portion de découpe présente un diamètre croissant en allant de ladite base vers ladite pointe.

Toutefois, ladite portion de découpe peut présenter un diamètre décroissant en allant de ladite base vers ladite pointe selon un autre mode de réalisation envisageable.

Selon une caractéristique avantageuse, ladite trajectoire hélicoïdale s'étend autour d'un axe médian, ladite base présentant un axe de rotation décalé par rapport audit axe médian ou à ladite âme porteuse.

Ce mode de réalisation permet de conférer une variabilité volumétrique à l'instrument endodontique dont découlent les avantages listés plus haut.

D'autres caractéristiques et avantages de l'invention apparaîtront plus clairement à la lecture de la description suivante de différents modes et variantes de réalisation de l'invention, donnés à titre de simples exemples illustratifs et non limitatifs, et des dessins annexés parmi lesquels :

- les figures 1 à 3 sont des vues schématiques d'un instrument endodontique selon un premier mode de réalisation de l'invention, respectivement vu de côté, vu en perspective et vu selon une coupe transversale ;
- les figures 4 et 5 sont des vues schématiques d'un deuxième mode de réalisation d'un instrument endodontique selon l'invention, respectivement vu de côté et vu en perspective ;
- les figures 6 et 7 sont des vues d'un troisième mode de réalisation d'un instrument endodontique selon l'invention, respectivement vu de côté et vu en perspective ;
- les figures 8 et 9 sont des vues d'un quatrième mode de réalisation d'un instrument endodontique selon l'invention, respectivement vu de côté et vu en perspective ;
- les figures 10 à 12 sont des vues d'un cinquième mode de réalisation d'un instrument endodontique selon l'invention, respectivement vu en perspective, vu de côté et vu selon une coupe transversale ;
- les figures 13 et 14 sont des vues d'un sixième mode de réalisation d'un instrument endodontique selon l'invention, respectivement vu de côté et vu en perspective ;
- les figures 15 à 26 sont chacune une représentation schématique de la trajectoire de l'âme porteuse de la portion de découpe d'un instrument endodontique selon l'invention.

Tel qu'indiqué précédemment, le principe de l'invention réside dans le fait de proposer un instrument endodontique dont l'arête de découpe est portée par une âme porteuse s'étendant selon une trajectoire hélicoïdale.

Bien sûr, la trajectoire hélicoïdale de l'âme porteuse peut être alternée par une trajectoire rectiligne, oblique, courbe, générant ainsi des arêtes rectilignes, obliques, courbes (si absence de conjugaison avec l'axe de rotation), hélicoïdales (si présence de conjugaison avec l'axe de rotation).

Ceci est illustré par les figures 1 à 3 qui représentent un exemple de réalisation d'un instrument endodontique selon l'invention.

Tel qu'illustré par ces figures, l'instrument endodontique comprend une base 1 pouvant constituer soit une extrémité de préhension destinée à être manipulée manuellement par un praticien, soit un organe d'assemblage pour monter l'instrument endodontique sur un embout d'un outil rotatif.

A titre indicatif, un instrument endodontique selon l'invention est réalisé à partir d'une tige métallique, et plus précisément à partir d'une tige réalisée en un alliage de nickel et de titane, usinée par une technique d'électro-érosion.

Le fil d'électro-érosion utilisé est déplacé selon une combinaison de déplacements longitudinaux et transversaux par rapport à l'axe longitudinal de l'instrument endodontique, de façon à générer des surfaces de découpe conduisant à leur intersection, à l'apparition d'une arête de découpe s'étendant longitudinalement le long d'une portion de découpe 2 s'étendant entre deux extrémités dont l'une est définie par la pointe 20 de l'instrument et l'autre par la base 1 de l'instrument.

La figure 3 est une vue selon une coupe transversale (c'est-à-dire dans un plan perpendiculaire à l'axe longitudinal X de l'instrument endodontique) de la portion de découpe 2, en l'occurrence au niveau du plan de coupe C indiqué sur la figure 1. La figure 3 fait donc apparaître une section transversale de la portion de découpe 2, prenant ici la forme d'un triangle ; cette section présente des surfaces de découpe , l'intersection de deux surfaces de découpe formant une arête de découpe 21. Cette section transversale présente un point central 22.

L'âme porteuse 200 est la trajectoire reliant les points centraux 22 de toutes les sections transversales le long de la portion de découpe, la ou les arêtes 21 étant donc portées par l'âme porteuse 200 le long de la portion de découpe.

Selon le principe de l'invention, l'âme porteuse 200 s'étend selon une trajectoire hélicoïdale. En effet, l'âme porteuse 200 présente une forme en spirale sur la figure 3 dont les extrémités correspondent aux extrémités de la portion de découpe, l'une d'entre elles correspondant à la pointe 20 et l'autre s'étendant à partir de la base 1.

De cette façon, les spires 23 formées dans la longueur de découpe 2 présentent une élasticité radiale qui offre les avantages suivants :

- la portion de découpe 2 est adaptable en diamètre, ce qui génère une zone de contact maximal entre les arêtes de l'instrument et la paroi du canal, quelle que soit la variabilité morphologique du canal (rétrécissement ou renflement), permettant au final un curetage pariétal optimal à tout instant ;
- la portion de découpe 2 est adaptable à la dureté du canal : l'instrument se rétracte en longueur et se contracte en largeur, automatiquement, ce qui permet à l'instrument éventuellement bloqué de se désengager naturellement de la zone bloquante, cette rétractabilité est conférée par l'âme porteuse qui va alors tourner en sens inverse du sens de rotation de la base.

Dans le respect du principe de l'invention, l'âme porteuse 200 peut alors prendre différentes configurations envisageables, parmi lesquelles :

- la trajectoire hélicoïdale de l'âme porteuse est constituée d'une pluralité de spires de même diamètre, avec un pas régulier, tel qu'illustré par la figure 15 ;

- la trajectoire hélicoïdale de l'âme porteuse est constituée par des spires de même diamètre, avec un pas variable croissant, tel qu'illustré par la figure 16 ;
- l'âme porteuse est constituée par une pluralité de spires de même diamètre, avec un pas variable décroissant, tel qu'illustré par la figure 17 ;
- la trajectoire hélicoïdale de l'âme porteuse est constituée par une pluralité de spires dont le diamètre décroît en direction de la pointe, ceci avec un pas régulier tel qu'illustré par la figure 21 ;
- la trajectoire hélicoïdale de l'âme porteuse est définie par une pluralité de spires dont le diamètre décroît en direction de la pointe, ceci avec un pas variable croissant tel qu'illustré par la figure 22 ;
- la trajectoire hélicoïdale de l'âme porteuse est constituée par une pluralité de spires dont le diamètre décroît en direction de la pointe, avec un pas variable décroissant tel qu'illustré par la figure 23 ;
- la trajectoire hélicoïdale de l'âme porteuse est constituée par une pluralité de spires dont le diamètre va croissant en direction de la pointe, avec un pas régulier tel qu'illustré par la figure 24 ;
- la trajectoire hélicoïdale de l'âme porteuse est constituée par une pluralité de spires dont le diamètre va croissant en direction de la pointe, avec un pas variable croissant tel qu'illustré par la figure 25 ;
- la trajectoire hélicoïdale de l'âme porteuse est constituée par une pluralité de spires dont le diamètre va croissant en direction de la pointe, avec un pas variable décroissant tel qu'illustré par la figure 26.

On note que la trajectoire hélicoïdale de l'âme porteuse s'étend autour d'un axe médian M qui peut être confondu avec l'axe de rotation R de la base 1 de l'instrument tel qu'illustré par les figures 15 à 17 et 21 à 26.

Selon des variantes envisageables, l'axe médian M de la trajectoire hélicoïdale de l'âme porteuse peut être décalé, en restant dans l'exemple illustré parallèle par rapport à l'axe de rotation R de la base tel qu'illustré par les figures 18, 19 et 20.

Bien entendu, ces variantes peuvent être combinées aux autres modes de réalisation illustrés sur les autres figures, hormis bien entendu le décalage entre l'axe de rotation R et l'axe médian M.

L'axe médian M peut ne pas être parallèle à l'axe de rotation R.

Par ailleurs, les spires 23 de la trajectoire hélicoïdale de l'âme porteuse peuvent être :

- non jointives, comme illustré par les figures 1 à 9 ;
- jointives, comme illustré par les figures 10 à 14.

Par ailleurs, l'axe médian M de la trajectoire hélicoïdale de l'âme porteuse peut être rectiligne tel qu'illustré par les figures 1 à 9, curviligne, ou quelconque

Selon un autre aspect de l'invention, les goujures (ou en d'autres termes, les surfaces de découpe) s'étendant entre deux arêtes de découpe délimitent, le long de la portion de découpe, une pluralité de sections transversales toutes centrées sur l'âme porteuse, ces goujures ou surfaces de découpe s'étendant elles-mêmes selon une trajectoire hélicoïdale autour de l'âme porteuse, ceci avec un pas qui peut être inférieur, égal ou supérieur au pas de la trajectoire hélicoïdale de l'âme porteuse.

De plus, la trajectoire hélicoïdale des goujures autour de la trajectoire hélicoïdale de l'âme porteuse peut être constituée d'une pluralité de spires d'un pas constant ou évolutif (croissant ou décroissant).

Selon le mode de réalisation illustré par les figures 1 et 2, l'âme porteuse de la portion de découpe présente une trajectoire hélicoïdale de forme conique de

la pointe 20 à la base 1, avec des spires présentant un pas variable croissant à partir de la pointe de l'instrument, et des goujures extérieures (entre deux arêtes de découpe) présentent une forme hélicoïdale avec un pas plus petit que celui de l'âme porteuse, les spires des goujures extérieures présentant un diamètre décroissant.

A titre indicatif, la trajectoire hélicoïdale de l'âme porteuse définit six tours, tandis que la trajectoire hélicoïdale des goujures extérieures (ou surfaces de découpe) définit douze tours.

Par exemple, selon le mode de réalisation illustré par les figures 4 et 5, la trajectoire hélicoïdale de l'âme porteuse de la portion de découpe est constituée par une pluralité de spires dont le diamètre va décroissant de la base vers la pointe de l'outil, avec un pas variable décroissant en allant vers la pointe de l'instrument. Les goujures extérieures forment un enroulement hélicoïdal autour de l'âme porteuse, les spires hélicoïdales présentant un diamètre décroissant en allant vers la pointe de l'outil, ceci avec un pas inférieur à celui de la trajectoire hélicoïdale de l'âme porteuse (la trajectoire hélicoïdale de l'âme porteuse définit six tours entre la base et la pointe de l'instrument tandis que la trajectoire hélicoïdale des goujures extérieures définit douze tours de la base à la pointe).

Par exemple encore, selon le mode de réalisation illustré par les figures 6 et 7, la trajectoire hélicoïdale de l'âme porteuse est constituée d'une pluralité de spires dont le diamètre décroît en direction de la pointe, avec un pas variable décroissant en allant vers la pointe. Les goujures extérieures définissent un enroulement hélicoïdal autour de l'âme porteuse, dont les spires présentent un diamètre variable décroissant en allant vers la pointe de l'outil, ceci avec un pas supérieur à celui de la trajectoire hélicoïdale de l'âme porteuse (nombre de tours défini par la trajectoire hélicoïdale de l'âme porteuse est égal à treize tandis que le nombre de tours défini par la trajectoire hélicoïdale des goujures extérieures est égal à six).

Par exemple encore, selon le mode de réalisation illustré par les figures 8 et 9, la trajectoire hélicoïdale de l'âme porteuse est constituée par une pluralité

de spires de diamètre constant avec un pas régulier. Les goujures extérieures définissent un enroulement autour de l'âme porteuse, avec des spires également de diamètre constant et un pas égal à celui de la trajectoire hélicoïdale de l'âme porteuse (nombre de tours défini par la trajectoire hélicoïdale de l'âme porteuse et par la trajectoire hélicoïdale des goujures extérieures est égal à dix sept).

En outre, tel qu'illustré par les figures 3 et 12, les spires de la portion de découpe présentent une section transversale pouvant présenter une forme triangulaire dont le centre 22 est un point de l'âme porteuse.

Toutefois, selon d'autres modes de réalisation envisageables, la section transversale des spires (ou plus généralement de l'âme porteuse) peut présenter une forme géométrique quelconque constituée de segments et/ou de secteurs courbes, par exemple une forme triangulaire, carrée, rectangulaire, polygonale, ovale, ou une combinaison de ces formes.

La forme de cette section transversale peut être composée de secteurs rectilignes et/ou courbes (concaves par exemple) et présenter une forme régulière ou non.

Le sens de la trajectoire hélicoïdale de l'âme porteuse peut être à gauche, ou à droite, ou mixé à gauche et à droite, une ou plusieurs fois, sur tout ou partie de la longueur de la portion de découpe.

En outre, la génératrice de l'enveloppe de la portion de découpe peut être :

- rectiligne, ce qui génère une enveloppe cylindrique ;
- rectiligne inclinée, ce qui génère une enveloppe de forme conique ou tronconique ;
- courbe (concave ou convexe), ce qui génère une enveloppe dont la forme est celle d'une sphère, d'une ogive, d'un diabolo…

Selon une autre caractéristique (combinée avec les caractéristiques précédentes ou indépendantes de celles-ci), la base 1 de l'instrument présente

une encoche 11 dont une des extrémités débouche à l'extrémité de la base à partir de laquelle s'étend la portion de découpe.

Une telle encoche permet de faciliter la circulation d'un fluide vers ou à partir du canal, par exemple s'agissant de l'introduction d'un fluide irrigant vers le canal.

Cet effet peut être optimisé en présence d'un évidement central 24 délimité par les spires 23 de l'instrument dans la portion de découpe, un tel évidement favorisant également la circulation de fluide à l'intérieur du canal.

En outre, une telle encoche permet de résoudre le problème éventuel de raideur qui existe sur l'instrument entre le manche (partie passive) et la lame (partie active).

On note que cette encoche peut être unique ou présente à plusieurs reprises. La forme de cette encoche peut être rectiligne, en hélice ou autre, dans le sens de la largeur, de la longueur, ou oblique.

Cette ou ces encoches et/ou l'évidement central permettent donc une circulation verticale des fluides, liquides ou semi-liquides, en des directions éventuellement opposées le long de la portion de découpe de l'instrument (proximo-distal ou disto-proximal) à l'intérieur et/ou à l'extérieur de l'instrument.

On note que la surface de l'instrument peut être plus ou moins granuleuse selon le réglage des machines d'usinage de l'instrument, y inclus le traitement de surfaces éventuelles consécutif à l'usinage pour assurer un caractère abrasif à l'instrument.

De plus, le manche et la lame peuvent être usinés d'un seul tenant pour obtenir un instrument monobloc, incluant la base permettant de tenir l'instrument sur un porte-instrument.

Il est à noter que l'invention s'applique plus généralement à un instrument endodontique utilisé pour travailler un canal dans une dent, présentant une base à partir de laquelle s'étend longitudinalement une partie active de

travail du canal porté par une âme porteuse, ladite âme porteuse s'étendant selon une trajectoire hélicoïdale.

En effet, le principe de l'invention s'applique tant à un instrument d'alésage de canaux dentaires, qu'à des outils de compactage, par exemple pour remplir et bourrer le canal de pâte ou d'autres produits d'obturation.

En effet, la combinaison de deux hélices sur l'instrument (l'une formée par l'âme porteuse et l'autre formée par l'enroulement hélicoïdal des goujures (surfaces de découpe autour de l'âme porteuse) permet d'envisager six familles de cas de figures et une large palette d'applications endodontiques. Ceci est résumé par le tableau ci-dessous.

Hélice		Comportement dynamique		Exemples d'applications endodontiques
G	P	Instrument	Fluides	
		Adaptable en diamètre, rétractable	Irrigant conduit vers l'apex par l'intérieur, débris évacués vers l'entrée par l'extérieur	Alésage et irrigation
		Adaptable en diamètre	Débris évacués vers l'entrée par l'intérieur et l'extérieur de l'instrument	instrument de compactage avec élimination des fluides
		Adaptable en diamètre	Fluide poussé vers l'apex par l'extérieur de l'instrument et évacué	Instrument de compactage ultra efficace
		Adaptable en diamètre, rétractable	Fluide poussé vers l'apex par l'intérieur et l'extérieur de l'instrument	alésage
0		Adaptable en largeur		
0		Rétractable	L'instrument vient se coincer autour du fragment cassé	Trépan pour dégager les fragments

G : goujures

P : âme porteuse

: sens de rotation dans le sens des aiguilles d'une montre

: sens de rotation dans le sens inverse des aiguilles d'une montre.

0 : pas de rotation

Par ailleurs, l'invention peut être appliquée sur des instruments présentant des caractéristiques de formes et/ou de dimensions variées appartenant notamment au groupe suivant :

- l'instrument est élaboré à partir d'une ébauche sous la forme d'une tige pleine ou d'un tube, rectiligne ou torsadée (ou de forme quelconque);
- dans le cas d'une ébauche usinée extérieurement, le nombre de goujures sur une section donnée est compris classiquement entre 1 et 6 (mais peut dépasser 6, notamment pour un instrument de gros diamètre);
- l'instrument endodontique peut présenter une conicité classique comprise entre 0 et 15 **%,** pouvant aller jusqu'à 30**%,** voire plus ;
- le diamètre de l'instrument est classiquement compris entre 0,06 mm et 1,2 mm, mais peut atteindre 4 mm dans le cas d'un usage vétérinaire par exemple, voire être inférieure à 0,06 mm à la pointe ;
- l'instrument présente une longueur classiquement comprise entre 15 et 30 mm, mais peut plus généralement varier entre 5 mm et 200 mm ;
- l'instrument est destiné à un usage manuel ou mécanisé, et peut présenter un moyen d'emmanchage ;
- l'instrument peut être destiné à un usage rotatif continu, rotatif alterné, à un mode vibratoire, voire à une combinaison de ces usages ;

- l'instrument peut être métallique (nickel-titane ou autres alliages éventuels, en acier inoxydable, en carbure, ou tous autres métaux éventuels…), voire en plastique.

REVENDICATIONS

1. Instrument endodontique utilisé pour travailler un canal dans une dent, présentant une base (1) à partir de laquelle s'étend longitudinalement une partie active de travail du canal, portée par une âme porteuse (200) caractérisé en ce que ladite âme porteuse s'étend selon une trajectoire hélicoïdale le long d'au moins une partie de ladite partie active.
2. Instrument endodontique selon la revendication 1, utilisé pour réaliser un canal dans une dent, présentant une base (1) à partir de laquelle s'étend au moins une arête de découpe (21), ladite arête de découpe (21) s'étendant longitudinalement le long d'une portion de découpe (2) présentant une pointe (20) à l'opposé de ladite base (1), ladite arête de découpe (21) étant portée le long de ladite portion de découpe (2) par une âme porteuse (200), caractérisé en ce que ladite âme porteuse s'étend selon une trajectoire hélicoïdale.
3. Instrument endodontique selon la revendication 1, caractérisé en ce que ladite portion de découpe présente une pluralité de spires (23) non jointives.
4. Instrument endodontique selon la revendication 1, caractérisé en ce que ladite portion de découpe présente une pluralité de spires (23) jointives.
5. Instrument endodontique selon l'une quelconque des revendications 1 à 3, caractérisé en ce que ladite portion de découpe (2) présente un évidement central (24).
6. Instrument endodontique selon la revendication 1, caractérisé en ce que l'âme porteuse (200) présente une section transversale dont la forme géométrique est une forme appartenant au groupe suivant : triangulaire, carrée, rectangulaire, polygonale, ovale, ou une combinaison de ces formes.
7. Instrument endodontique selon l'une quelconque des revendications 2 à 6,

caractérisé en ce que lesdites spires (23) présentent une section transversale qui va décroissante en allant de ladite base (1) vers ladite pointe (20).

8. Instrument endodontique selon l'une quelconque des revendications 1 à 7, caractérisé en ce que ladite trajectoire hélicoïdale s'étend autour d'un axe médian curviligne.

9. Instrument endodontique selon l'une quelconque des revendications 1 à 7, caractérisé en ce que ladite trajectoire hélicoïdale s'étend autour d'un axe médian rectiligne.

10. Instrument endodontique selon l'une quelconque des revendications 1 à 9, caractérisé en ce que ladite portion de découpe (2) présente un diamètre externe constant.

11. Instrument endodontique selon l'une quelconque des revendications 1 à 9, caractérisé en ce que ladite portion de découpe (2) présente un diamètre externe évolutif.

12. Instrument endodontique selon la revendication 11, caractérisé en ce que ladite portion de découpe (2) présente une forme conique ou tronconique.

13. Instrument endodontique selon la revendication 11, caractérisé en ce que ladite portion de découpe (2) présente un diamètre croissant en allant de ladite base (1) vers ladite pointe (20).

14. Instrument endodontique selon la revendication 11, caractérisé en ce que ladite portion de découpe (2) présente un diamètre décroissant en allant de ladite base (1) vers ladite pointe (20).

15. Instrument endodontique selon l'une quelconque des revendications 1 à 14, caractérisé en ce que ladite trajectoire hélicoïdale s'étend autour d'un axe médian, ladite base présentant un axe de rotation décalée par rapport audit axe médian de ladite âme centrale.

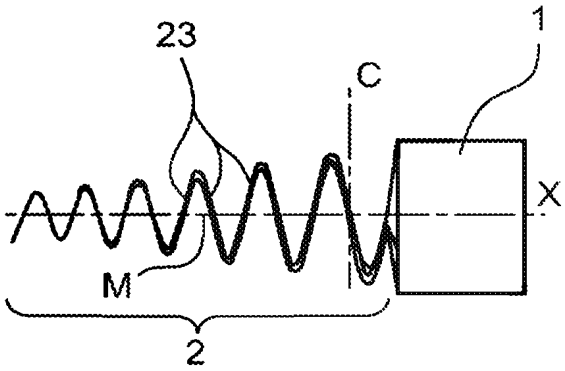

Fig. 1

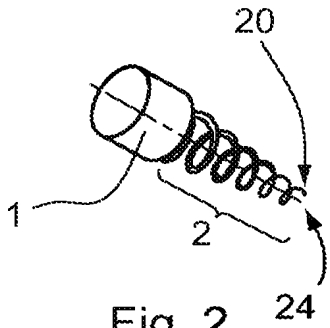

Fig. 2

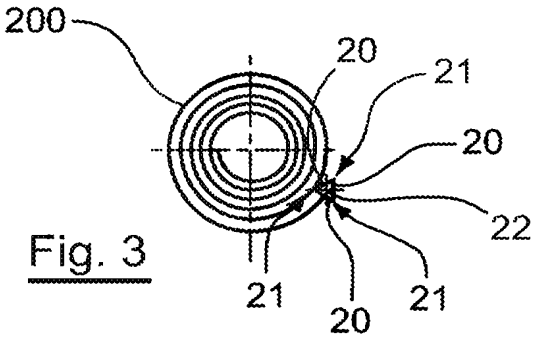

Fig. 3

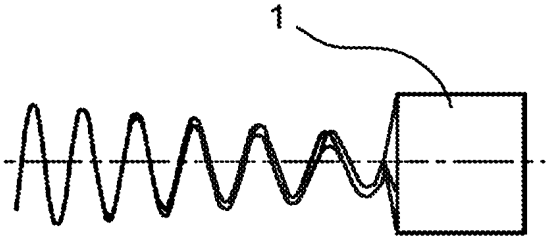

Fig. 4

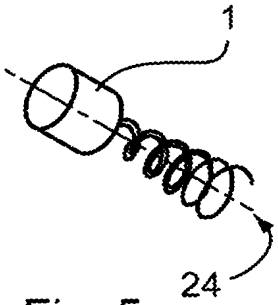

Fig. 5

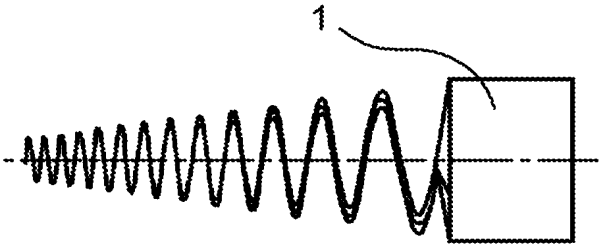

Fig. 6

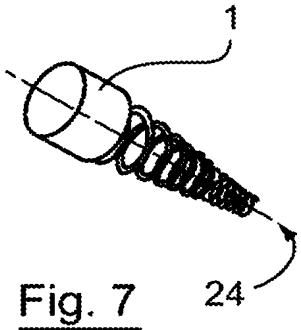

Fig. 7

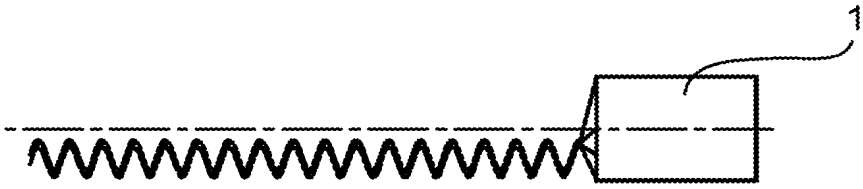

Fig. 8

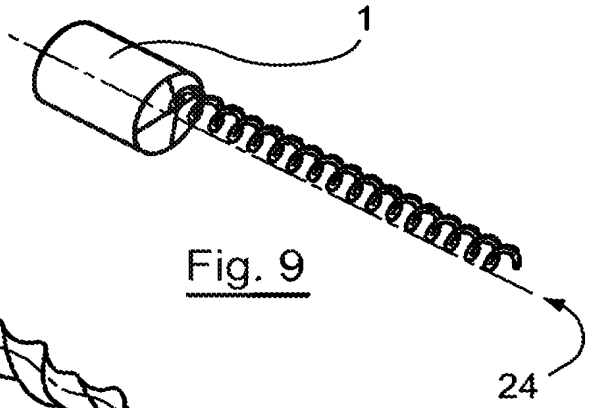

Fig. 9

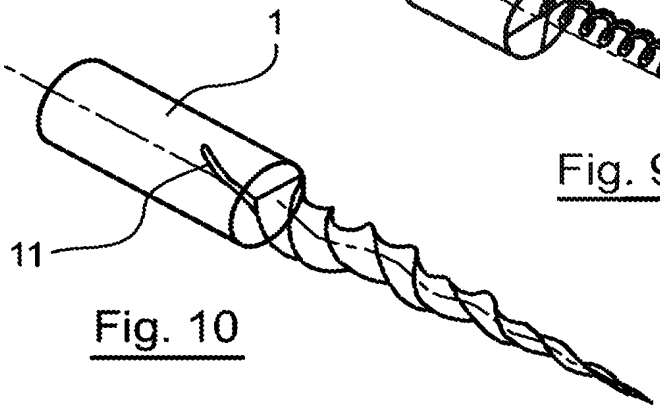

Fig. 10

Fig. 11

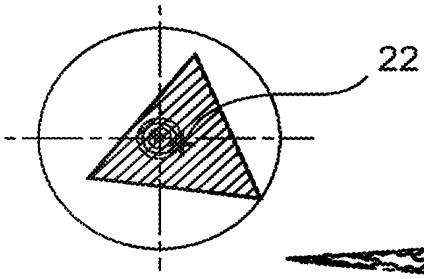

Fig. 12

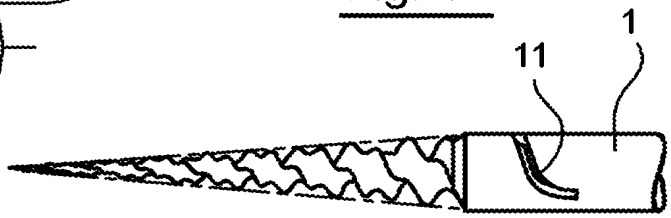

Fig. 13

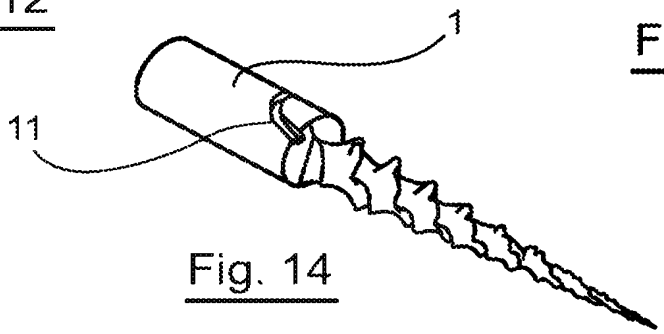

Fig. 14

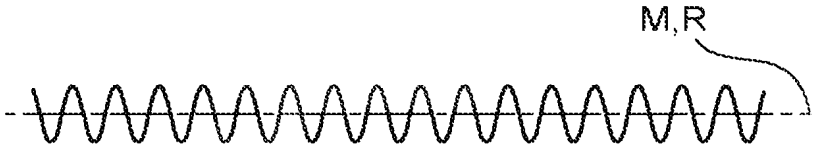

Fig. 15

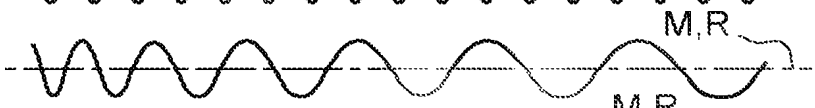

Fig. 16

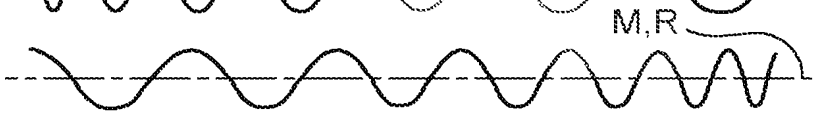

Fig. 17

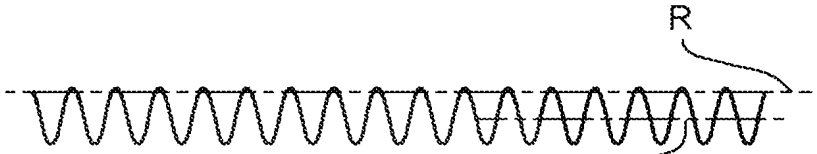

Fig. 18

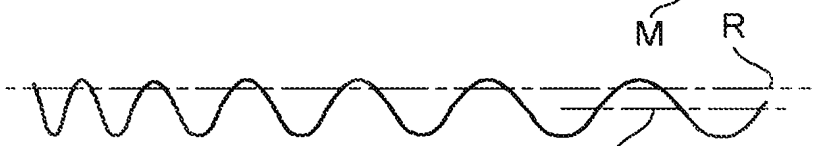

Fig. 19

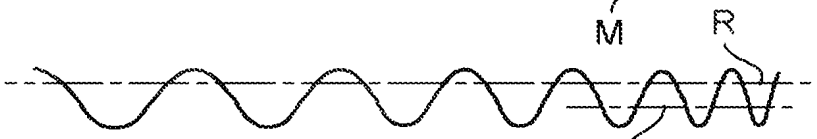

Fig. 20

Fig. 21

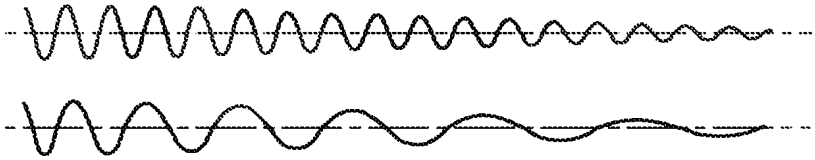

Fig. 22

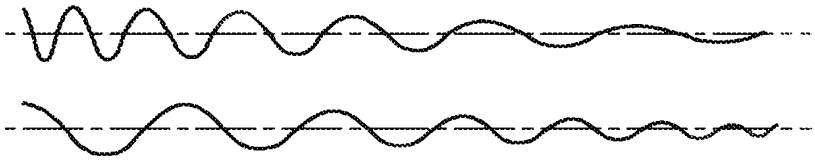

Fig. 23

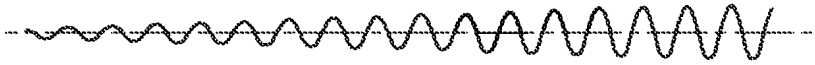

Fig. 24

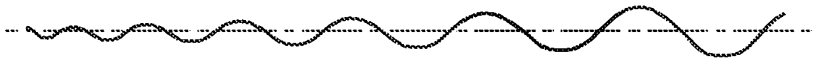

Fig. 25

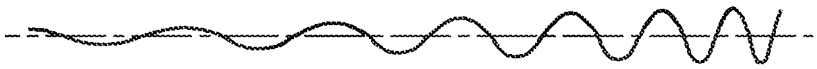

Fig. 26

INTERNATIONAL SEARCH REPORT

International application No
PCT/EP2011/066341

A. CLASSIFICATION OF SUBJECT MATTER
INV. A61C5/02
ADD.

According to International Patent Classification (IPC) or to both national classification and IPC

B. FIELDS SEARCHED

Minimum documentation searched (classification system followed by classification symbols)
A61C

Documentation searched other than minimum documentation to the extent that such documents are included in the fields searched

Electronic data base consulted during the international search (name of data base and, where practical, search terms used)

EPO-Internal

C. DOCUMENTS CONSIDERED TO BE RELEVANT

Category*	Citation of document, with indication, where appropriate, of the relevant passages	Relevant to claim No.
X	EP 0 120 542 A1 (FLUCKIGER & HUGUENIN SA [CH]) 3 October 1984 (1984-10-03) abstract; figures	1,2,4,6, 9,10
X	US 5 803 732 A (MUSIKANT BARRY [US] ET AL) 8 September 1998 (1998-09-08) column 4, lines 46-67; figure 4	1-3,5-7, 9,11,12, 14
X	EP 1 709 934 A1 (SCIANAMBLO MICHAEL J [US]) 11 October 2006 (2006-10-11) figures	1,2,4, 6-12,14
X	US 2006/127843 A1 (ROSENBLOOD KENNETH [US] ET AL) 15 June 2006 (2006-06-15) figures 3a, 4a, 7a	1-3,5-7, 9,11,12, 14

-/--

[X] Further documents are listed in the continuation of Box C.

[X] See patent family annex.

* Special categories of cited documents :

"A" document defining the general state of the art which is not considered to be of particular relevance

"E" earlier document but published on or after the international filing date

"L" document which may throw doubts on priority claim(s) or which is cited to establish the publication date of another citation or other special reason (as specified)

"O" document referring to an oral disclosure, use, exhibition or other means

"P" document published prior to the international filing date but later than the priority date claimed

"T" later document published after the international filing date or priority date and not in conflict with the application but cited to understand the principle or theory underlying the invention

"X" document of particular relevance; the claimed invention cannot be considered novel or cannot be considered to involve an inventive step when the document is taken alone

"Y" document of particular relevance; the claimed invention cannot be considered to involve an inventive step when the document is combined with one or more other such documents, such combination being obvious to a person skilled in the art.

"&" document member of the same patent family

Date of the actual completion of the international search	Date of mailing of the international search report
28 November 2011	07/12/2011
Name and mailing address of the ISA/ European Patent Office, P.B. 5818 Patentlaan 2 NL - 2280 HV Rijswijk Tel. (+31-70) 340-2040, Fax: (+31-70) 340-3016	Authorized officer Fouquet, Michèle

Form PCT/ISA/210 (second sheet) (April 2005)

INTERNATIONAL SEARCH REPORT

International application No
PCT/EP2011/066341

C(Continuation). DOCUMENTS CONSIDERED TO BE RELEVANT

Category*	Citation of document, with indication, where appropriate, of the relevant passages	Relevant to claim No.
X	US 2006/228668 A1 (MCSPADDEN JOHN T [US]) 12 October 2006 (2006-10-12) figures -----	1,2,4,6, 8,9, 11-15
X	US 2005/272004 A1 (DESROSIERS JOHN J [US]) 8 December 2005 (2005-12-08) figure 11 -----	1,2,4,6, 9,11-14
X	WO 2010/030668 A1 (MCSPADDEN JOHN T [US]; FERBER MARK S [US]) 18 March 2010 (2010-03-18) claims 11-20; figures -----	1-3,5-9, 11,12, 14,15
X	EP 1 779 804 A2 (MEDIC NRG LTD [IL]) 2 May 2007 (2007-05-02) claims; figures -----	1-7, 9-12,14, 15
X,P	WO 2011/104705 A1 (MEDIC NRG LTD [IL]; BECKER ARIK [IL]; LEVY HAIM [IL]; ROTHENSTEIN SIMO) 1 September 2011 (2011-09-01) claims 1, 12, 13, 15-20; figures -----	1-3,5-7, 9-12,14, 15

Form PCT/ISA/210 (continuation of second sheet) (April 2005)

INTERNATIONAL SEARCH REPORT

Information on patent family members

International application No
PCT/EP2011/066341

Patent document cited in search report		Publication date	Patent family member(s)			Publication date
EP 0120542	A1	03-10-1984	CH	651746	A5	15-10-1985
			DE	3460215	D1	17-07-1986
			EP	0120542	A1	03-10-1984
US 5803732	A	08-09-1998	NONE			
EP 1709934	A1	11-10-2006	AT	503433	T	15-04-2011
			EP	1709934	A1	11-10-2006
			ES	2363981	T3	22-08-2011
US 2006127843	A1	15-06-2006	US	2006127843	A1	15-06-2006
			US	2008057468	A1	06-03-2008
US 2006228668	A1	12-10-2006	US	2006228668	A1	12-10-2006
			US	2010255442	A1	07-10-2010
US 2005272004	A1	08-12-2005	EP	1761193	A1	14-03-2007
			JP	2008501541	A	24-01-2008
			US	2005272004	A1	08-12-2005
			WO	2005122941	A1	29-12-2005
WO 2010030668	A1	18-03-2010	AU	2009291863	A1	18-03-2010
			CN	102215772	A	12-10-2011
			EP	2334251	A1	22-06-2011
			KR	20110050563	A	13-05-2011
			US	2010233648	A1	16-09-2010
			WO	2010030668	A1	18-03-2010
EP 1779804	A2	02-05-2007	EP	1779804	A2	02-05-2007
			JP	2007125392	A	24-05-2007
			TW	200820948	A	16-05-2008
			US	2007099149	A1	03-05-2007
WO 2011104705	A1	01-09-2011	NONE			

RAPPORT DE RECHERCHE INTERNATIONALE

Demande internationale n°
PCT/EP2011/066341

A. CLASSEMENT DE L'OBJET DE LA DEMANDE
INV. A61C5/02
ADD.

Selon la classification internationale des brevets (CIB) ou à la fois selon la classification nationale et la CIB

B. DOMAINES SUR LESQUELS LA RECHERCHE A PORTE

Documentation minimale consultée (système de classification suivi des symboles de classement)
A61C

Documentation consultée autre que la documentation minimale dans la mesure où ces documents relèvent des domaines sur lesquels a porté la recherche

Base de données électronique consultée au cours de la recherche internationale (nom de la base de données, et si cela est réalisable, termes de recherche utilisés)
EPO-Internal

C. DOCUMENTS CONSIDERES COMME PERTINENTS

Catégorie*	Identification des documents cités, avec, le cas échéant, l'indication des passages pertinents	no. des revendications visées
X	EP 0 120 542 A1 (FLUCKIGER & HUGUENIN SA [CH]) 3 octobre 1984 (1984-10-03) abrégé; figures	1,2,4,6, 9,10
X	US 5 803 732 A (MUSIKANT BARRY [US] ET AL) 8 septembre 1998 (1998-09-08) colonne 4, ligne 46-67; figure 4	1-3,5-7, 9,11,12, 14
X	EP 1 709 934 A1 (SCIANAMBLO MICHAEL J [US]) 11 octobre 2006 (2006-10-11) figures	1,2,4, 6-12,14
X	US 2006/127843 A1 (ROSENBLOOD KENNETH [US] ET AL) 15 juin 2006 (2006-06-15) figures 3a, 4a, 7a	1-3,5-7, 9,11,12, 14

-/--

[X] Voir la suite du cadre C pour la fin de la liste des documents

[X] Les documents de familles de brevets sont indiqués en annexe

* Catégories spéciales de documents cités:

"A" document définissant l'état général de la technique, non considéré comme particulièrement pertinent
"E" document antérieur, mais publié à la date de dépôt international ou après cette date
"L" document pouvant jeter un doute sur une revendication de priorité ou cité pour déterminer la date de publication d'une autre citation ou pour une raison spéciale (telle qu'indiquée)
"O" document se référant à une divulgation orale, à un usage, à une exposition ou tous autres moyens
"P" document publié avant la date de dépôt international, mais postérieurement à la date de priorité revendiquée
"T" document ultérieur publié après la date de dépôt international ou la date de priorité et n'appartenant pas à l'état de la technique pertinent, mais cité pour comprendre le principe ou la théorie constituant la base de l'invention
"X" document particulièrement pertinent; l'invention revendiquée ne peut être considérée comme nouvelle ou comme impliquant une activité inventive par rapport au document considéré isolément
"Y" document particulièrement pertinent; l'invention revendiquée ne peut être considérée comme impliquant une activité inventive lorsque le document est associé à un ou plusieurs autres documents de même nature, cette combinaison étant évidente pour une personne du métier
"&" document qui fait partie de la même famille de brevets

Date à laquelle la recherche internationale a été effectivement achevée	Date d'expédition du présent rapport de recherche internationale
28 novembre 2011	07/12/2011

Nom et adresse postale de l'administration chargée de la recherche internationale	Fonctionnaire autorisé
Office Européen des Brevets, P.B. 5818 Patentlaan 2 NL - 2280 HV Rijswijk Tel. (+31-70) 340-2040, Fax: (+31-70) 340-3016	Fouquet, Michèle

Formulaire PCT/ISA/210 (deuxième feuille) (avril 2005)

RAPPORT DE RECHERCHE INTERNATIONALE

Demande internationale n°
PCT/EP2011/066341

C(suite). DOCUMENTS CONSIDERES COMME PERTINENTS

Catégorie*	Identification des documents cités, avec, le cas échéant, l'indication des passages pertinents	no. des revendications visées
X	US 2006/228668 A1 (MCSPADDEN JOHN T [US]) 12 octobre 2006 (2006-10-12) figures -----	1,2,4,6, 8,9, 11-15
X	US 2005/272004 A1 (DESROSIERS JOHN J [US]) 8 décembre 2005 (2005-12-08) figure 11 -----	1,2,4,6, 9,11-14
X	WO 2010/030668 A1 (MCSPADDEN JOHN T [US]; FERBER MARK S [US]) 18 mars 2010 (2010-03-18) revendications 11-20; figures -----	1-3,5-9, 11,12, 14,15
X	EP 1 779 804 A2 (MEDIC NRG LTD [IL]) 2 mai 2007 (2007-05-02) revendications; figures -----	1-7, 9-12,14, 15
X,P	WO 2011/104705 A1 (MEDIC NRG LTD [IL]; BECKER ARIK [IL]; LEVY HAIM [IL]; ROTHENSTEIN SIMO) 1 septembre 2011 (2011-09-01) revendications 1, 12, 13, 15-20; figures -----	1-3,5-7, 9-12,14, 15

RAPPORT DE RECHERCHE INTERNATIONALE

Renseignements relatifs aux membres de familles de brevets

Demande internationale n°
PCT/EP2011/066341

Document brevet cité au rapport de recherche		Date de publication	Membre(s) de la famille de brevet(s)		Date de publication
EP 0120542	A1	03-10-1984	CH	651746 A5	15-10-1985
			DE	3460215 D1	17-07-1986
			EP	0120542 A1	03-10-1984
US 5803732	A	08-09-1998	AUCUN		
EP 1709934	A1	11-10-2006	AT	503433 T	15-04-2011
			EP	1709934 A1	11-10-2006
			ES	2363981 T3	22-08-2011
US 2006127843	A1	15-06-2006	US	2006127843 A1	15-06-2006
			US	2008057468 A1	06-03-2008
US 2006228668	A1	12-10-2006	US	2006228668 A1	12-10-2006
			US	2010255442 A1	07-10-2010
US 2005272004	A1	08-12-2005	EP	1761193 A1	14-03-2007
			JP	2008501541 A	24-01-2008
			US	2005272004 A1	08-12-2005
			WO	2005122941 A1	29-12-2005
WO 2010030668	A1	18-03-2010	AU	2009291863 A1	18-03-2010
			CN	102215772 A	12-10-2011
			EP	2334251 A1	22-06-2011
			KR	20110050563 A	13-05-2011
			US	2010233648 A1	16-09-2010
			WO	2010030668 A1	18-03-2010
EP 1779804	A2	02-05-2007	EP	1779804 A2	02-05-2007
			JP	2007125392 A	24-05-2007
			TW	200820948 A	16-05-2008
			US	2007099149 A1	03-05-2007
WO 2011104705	A1	01-09-2011	AUCUN		

Electronic Acknowledgement Receipt

EFS ID:	28590638
Application Number:	14651677
International Application Number:	
Confirmation Number:	4162
Title of Invention:	INSTRUMENT FOR DRILLING DENTAL ROOT CANALS
First Named Inventor/Applicant Name:	Gilbert ROTA
Customer Number:	466
Filer:	Eric Jensen/Latasha Conley
Filer Authorized By:	Eric Jensen
Attorney Docket Number:	5001-1489
Receipt Date:	13-MAR-2017
Filing Date:	12-JUN-2015
Time Stamp:	08:01:40
Application Type:	U.S. National Stage under 35 USC 371

Payment information:

Submitted with Payment	no

File Listing:

Document Number	Document Description	File Name	File Size(Bytes)/ Message Digest	Multi Part /.zip	Pages (if appl.)
1	Information Disclosure Statement (IDS) Form (SB08)	IDS.pdf	612314 a2d7b7065210adc288c2a0dada78cb8317d399a4	no	4

Warnings:

Information:					
A U.S. Patent Number Citation or a U.S. Publication Number Citation is required in the Information Disclosure Statement (IDS) form for autoloading of data into USPTO systems. You may remove the form to add the required data in order to correct the Informational Message if you are citing U.S. References. If you chose not to include U.S. References, the image of the form will be processed and be made available within the Image File Wrapper (IFW) system. However, no data will be extracted from this form. Any additional data such as Foreign Patent Documents or Non Patent Literature will be manually reviewed and keyed into USPTO systems.					
2	Non Patent Literature	JP_OA.pdf	921426 62c8a665efbe9646229f58775978d8e4f2153f6b	no	5
Warnings:					
Information:					
3	Foreign Reference	JP2009502349A.pdf	2875593 309bd0e7f6b5ff2883cfee9b7682497edf984f2e	no	17
Warnings:					
Information:					
4	Foreign Reference	WO2012038437A1.pdf	2940069 e4173634a0a828b0bab59f427d7f30e75fe76175	no	30
Warnings:					
Information:					
			Total Files Size (in bytes):	7349402	

This Acknowledgement Receipt evidences receipt on the noted date by the USPTO of the indicated documents, characterized by the applicant, and including page counts, where applicable. It serves as evidence of receipt similar to a Post Card, as described in MPEP 503.

New Applications Under 35 U.S.C. 111
If a new application is being filed and the application includes the necessary components for a filing date (see 37 CFR 1.53(b)-(d) and MPEP 506), a Filing Receipt (37 CFR 1.54) will be issued in due course and the date shown on this Acknowledgement Receipt will establish the filing date of the application.

National Stage of an International Application under 35 U.S.C. 371
If a timely submission to enter the national stage of an international application is compliant with the conditions of 35 U.S.C. 371 and other applicable requirements a Form PCT/DO/EO/903 indicating acceptance of the application as a national stage submission under 35 U.S.C. 371 will be issued in addition to the Filing Receipt, in due course.

New International Application Filed with the USPTO as a Receiving Office
If a new international application is being filed and the international application includes the necessary components for an international filing date (see PCT Article 11 and MPEP 1810), a Notification of the International Application Number and of the International Filing Date (Form PCT/RO/105) will be issued in due course, subject to prescriptions concerning national security, and the date shown on this Acknowledgement Receipt will establish the international filing date of the application.

MAIL STOP AMENDMENT
PATENT
5001-1489

IN THE U. S. PATENT AND TRADEMARK OFFICE

In re application of

Gilbert ROTA et al. Conf. 4162

Application No. 14/651,677 Group 3766

Filed: June 12, 2015 Examiner BERTRAM, ERIC D.

Title: INSTRUMENT FOR DRILLING DENTAL ROOT CANALS

AMENDMENT

Commissioner for Patents April 26, 2017
P.O. Box 1450
Alexandria, VA 22313-1450

Sir:

In response to the non-final Office Action mailed January 30, 2017, please amend the above-identified application as follows:

Amendments to the Claims are reflected in the listing of claims which begins on page 2 of this paper.

Remarks begin on page 7 of this paper.

AMENDMENTS TO THE CLAIMS:

This listing of claims will replace all prior versions, and listings, of claims in the application:

LISTING OF CLAIMS:

1. (currently amended) An [[I]]instrument for drilling dental root canals comprising:

a tapered rod defined by a single continuous taper function ~~(1)~~ and having over at least an active part of its length [[-]] ~~the active part (1b)~~ [[-]] a polygonal cross-section ~~(4)~~ forming at least two cutting edges ~~(5a, 5b; 52, 54)~~, said active part ~~(1b)~~ terminating by a point ~~(3)~~ and being defined by an envelope ~~(7)~~ of a cylindrical or conical shape along its entire length, the longitudinal axis of the envelope ~~which coincides~~ coinciding with the axis of rotation ~~(R)~~ of the instrument, ~~characterised in that~~

wherein for any cross-section of the active part, at least one of the at least two cutting edges is located on the envelope,

said active part ~~(1b)~~ has a first portion ~~(1c)~~ ~~e~~xtending from the point ~~(3)~~ and a second portion ~~(1d)~~ ~~e~~xtending following the first portion ~~(1c)~~ towards the rear of the active part, ~~(1b); by the fact that~~

any cross-section ~~(4a; 4'a; 40a)~~ of the first portion ~~(1c)~~ has a ~~centre~~ center of mass ~~(ma; m'a m40a)~~

located on the axis of rotation, ~~(R) and that~~ said at least two cutting edges ~~(5a, 5b; 52, 54)~~ defined by said cross-section ~~(4a; 4'a; 40a)~~ of the first portion being [[are]] located on the envelope, ~~(7); and by the fact that~~

at least one cross-section ~~(4b; 4'b; 401b)~~ of the second portion ~~(1d)~~ has a ~~centre~~ center of mass ~~(mb; m'b m401b)~~ offset with respect to the axis of rotation, ~~(R) and~~ at least one cutting edge ~~(5a; 52, 54)~~ defined by said cross-section ~~(4b; 4'b; 401b)~~ of the second portion being [[is]] located set back within the envelope ~~(7)~~.

2. (currently amended) The [[I]]instrument as claimed in claim 1, ~~characterised in that~~ wherein any of the cross-sections ~~(4b; 4'b)~~ of the second portion ~~(1d)~~ has a ~~centre~~ center of mass ~~(mb; m'b)~~ offset with respect to the axis of rotation, ~~(R)~~ and

at least one cutting edge ~~(5a)~~ defined by said cross-section ~~(4b; 4'b)~~ of the second portion is located set back within the envelope ~~(7)~~.

3. (currently amended) The [[I]]instrument as claimed in claim 2, ~~characterised in that~~ wherein exactly one cutting edge ~~(5a)~~ defined by any of the cross-sections ~~(4b)~~ of the second portion ~~(1d)~~ of the active part ~~(1b)~~ is located on the envelope ~~(7)~~.

4. (currently amended) The [[I]]instrument as claimed in claim 2, ~~characterised in that~~ wherein one of the[[a]] cross-sections ~~(4b)~~ of the second portion ~~(1d)~~ of the active part ~~(1b)~~ that is located close to the point ~~(3)~~ has a ~~centre~~ center of mass ~~(mb)~~ proportionally closer to the axis of rotation ~~(R)~~ than the ~~centre~~ center of mass of [[a]]one of the cross-sections of said second portion ~~(1d)~~ that is located at the rear of the active part ~~(1b)~~.

5. (currently amended) The [[I]]instrument as claimed in claim 1, ~~characterised in that~~ wherein the second portion ~~(1d)~~ has an alternating arrangement of ~~centred~~

centered zones ~~(12)~~ in which any cross-section ~~(402b)~~ has a ~~centre~~ center of mass ~~(m402b)~~ on the axis of rotation ~~(R)~~ and said at least two cutting edges ~~(52, 54)~~ defined by said cross-section ~~(402b)~~ of the centered zones are located on the envelope, ~~(7)~~ and

~~off-centre~~ off-center zones ~~(11)~~ in which any cross-section ~~(401b)~~ has a ~~centre~~ center of mass ~~(m401b)~~ offset with respect to said axis of rotation ~~(R)~~ and at least one cutting edge ~~(52, 54)~~ defined by said cross-section of the off-center zones ~~(401b)~~ is located set back within the envelope ~~(7)~~.

6. (currently amended) The [[I]]instrument as claimed in claim 5, ~~characterised in that~~ wherein the ~~off-centre~~ off-center zones ~~(11)~~ alternate between

first zones in which for any cross-section ~~(401b)~~ a first ~~(52)~~ of the at least two cutting edges ~~(52, 54)~~ defined by said cross-section of the first zones is located set back within the envelope ~~(7)~~ while the second ~~(54)~~ of the at least two cutting edges is located on the envelope, ~~(7)~~ and

second zones in which for any cross-section, the second ~~(54)~~ of the at least two cutting edges ~~(52)~~ defined by said cross-section of the second zones is located set back within the envelope ~~(7)~~ while the first cutting edge ~~(52)~~ is located on the envelope ~~(7)~~.

7. (currently amended) The [[I]]instrument as claimed in claim 1, ~~characterised in that~~ wherein the active part ~~(1b)~~ has over its ~~whole~~ entire length a polygonal cross-section with straight sides.

8. (currently amended) The [[I]]instrument as claimed in claim 1, ~~characterised in that~~ wherein the first portion ~~(1c)~~ of the active part ~~(1b)~~ has a square cross-section, and ~~that~~

the second portion ~~(1d)~~ of the active part has a rectangular cross-section.

9. (currently amended) The [[I]]instrument as claimed in claim 1, ~~characterised in that~~ wherein the first portion ~~(1c)~~ of the active part ~~(1b)~~ has a length between 1 and 3 millimeters ~~millimetres~~.

10. (currently amended) The [[I]]instrument as claimed in claim 3, ~~characterised in that~~ wherein one of the[[a]] cross-sections ~~(4b)~~ of the second portion ~~(1d)~~ of the active part ~~(1b)~~ that is located close to the point ~~(3)~~ has a ~~centre~~ center of mass ~~(mb)~~ proportionally closer to the axis of rotation ~~(R)~~ than the ~~centre~~ center of mass of [[a]]one of the cross-sections of said second portion ~~(1d)~~ that is located at the rear of the active part ~~(1b)~~.

REMARKS

Claims 1-10 were rejected.

Claims 1-10 are amended.

Claims 1-10 are currently pending in this application.

I. Rejections under 35 U.S.C. § 102/103

In the Office Action, at pages 3-5, claims 1-10 were rejected under 35 U.S.C. § 102 or § 103 as being anticipated by, or unpatentable over, US 2006/0228668 to McSpadden ("McSpadden"). These rejections are respectfully traversed.

In a non-limiting example, the present invention is directed to an instrument for drilling dental root canals, illustrated in an exemplary embodiment in Figs. 1-4, reproduced below.

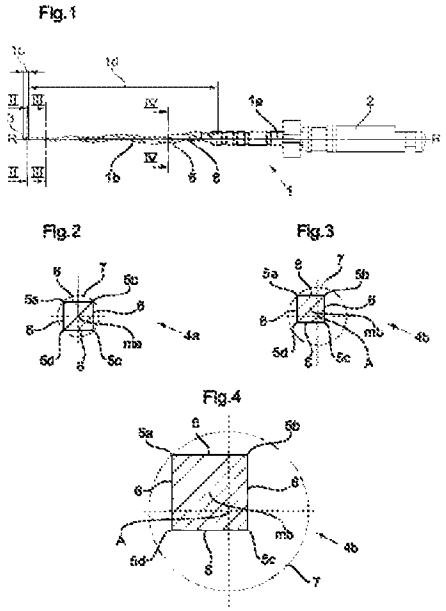

Claim 1 is amended to clarify that the envelope is a single conical or cylindrical surface tangent to each cross-section of the active part of the instruction.

These aspects of the present invention are reflected in amended independent claim 1.

In short, McSpadden does not disclose or suggest:

> a tapered rod defined by a single continuous taper function and having over at least an active part of its length a polygonal cross-section forming at least two cutting edges, said active part terminating by a point and being defined by an envelope of a cylindrical or conical shape along its entire length,…
>
> wherein for any cross-section of the active part, at least one of the at least two cutting edges is located on the envelope,

as recited in amended independent claim 1.

McSpadden discloses an instrument for the drilling of dental root canals comprising a tapered shaft, illustrated in Figs. 2A and 2C, reproduced below.

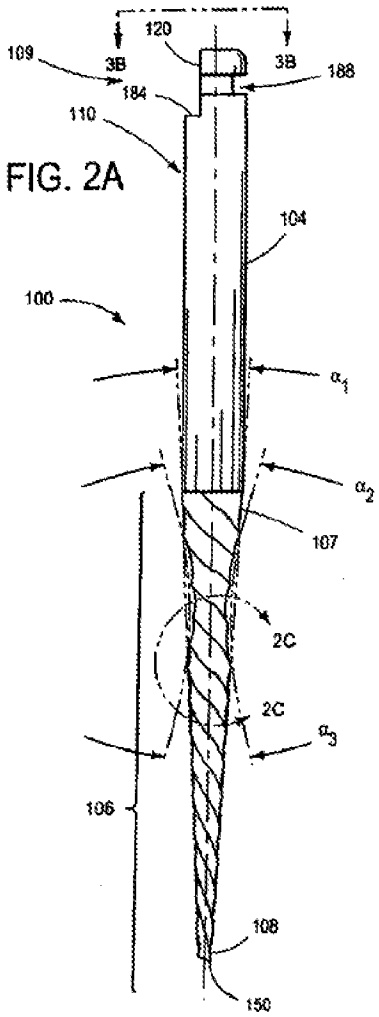

FIG. 2A

FIG. 2C

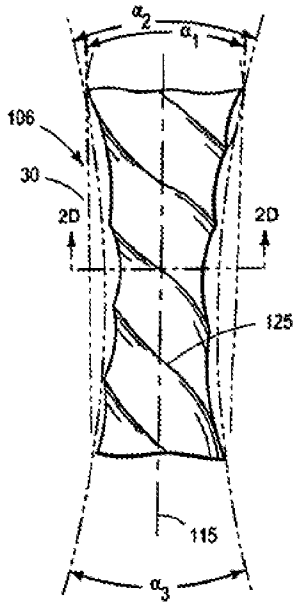

The Office asserts that the envelope is best defined by α_1, α_2, and α_3.

McSpadden discloses that the instrument includes a shaft that has a first taper function that is an elongated cone having a substantially uniform angle of conicity α_1 and a second taper function that varies from a positive taper angle α_2 to a negative taper angle α_3.

In contrast to the present invention, McSpadden does not disclose or suggest that an active part terminates by a

point and is defined by an envelope of a cylindrical or conical shape along its entire length. The envelope defined by α_1, α_2, and α_3 is a surface that does not have a cylindrical or conical shape along its entire surface. The combination of α_1, α_2, and α_3 is not a cylinder or a cone.

In addition, in contrast to the present invention, McSpadden does not disclose or suggest a tapered rod having a single continuous taper function. The instrument of McSpadden is a multi-tapered instrument that is not defined by a single continuous taper function.

Further, in contrast to the present invention, McSpadden does not disclose or suggest that, for any cross-section of the active part, at least one of the at least two cutting edges is located on the envelope. In McSpadden, there are cross-sections with no cutting edge on the envelope.

Therefore, McSpadden does not disclose or suggest all the features of amended independent claim 1, and claim 1 is patentably distinguished over the reference relied upon. Claims 2-10 depend either directly or indirectly from amended independent claim 1, and are therefore patentably distinguished over the reference relied upon for at least the reasons discussed above. Accordingly, withdrawal of the §102(b) or § 103(a) rejection is respectfully requested.

II. Conclusion

In view of the present amendment and the foregoing remarks, it is believed that the present application has been placed in condition for allowance. Reconsideration and allowance are respectfully requested.

The Commissioner is hereby authorized in this, concurrent, and future submissions to charge any additional fees(s) or underpayment of fee(s) under 37 C.F.R. §§ 1.16 and 1.17 or credit any overpayment of fee(s) to Deposit Account No. 25-0120.

Respectfully submitted,

YOUNG & THOMPSON

/Kari P. Footland/

Kari P. Footland, Reg. No. 55,187
Customer No. 00466
209 Madison Street, Suite 500
Alexandria, VA 22314
Telephone (703) 521-2297
Facsimile (703) 685-0573

KPF/jr

Electronic Acknowledgement Receipt

EFS ID:	29034311
Application Number:	14651677
International Application Number:	
Confirmation Number:	4162
Title of Invention:	INSTRUMENT FOR DRILLING DENTAL ROOT CANALS
First Named Inventor/Applicant Name:	Gilbert ROTA
Customer Number:	466
Filer:	Eric Jensen/Joni Ralls
Filer Authorized By:	Eric Jensen
Attorney Docket Number:	5001-1489
Receipt Date:	26-APR-2017
Filing Date:	12-JUN-2015
Time Stamp:	14:18:35
Application Type:	U.S. National Stage under 35 USC 371

Payment information:

Submitted with Payment	no

File Listing:

Document Number	Document Description	File Name	File Size(Bytes)/ Message Digest	Multi Part /.zip	Pages (if appl.)
1		AMD1.pdf	144058 ca032d5b0f0a22ca7476a9676d46b9832f2076e1	yes	11

	Multipart Description/PDF files in .zip description		
	Document Description	**Start**	**End**
	Amendment/Req. Reconsideration-After Non-Final Reject	1	1
	Claims	2	6
	Applicant Arguments/Remarks Made in an Amendment	7	11
Warnings:			
Information:			
	Total Files Size (in bytes):	144058	

This Acknowledgement Receipt evidences receipt on the noted date by the USPTO of the indicated documents, characterized by the applicant, and including page counts, where applicable. It serves as evidence of receipt similar to a Post Card, as described in MPEP 503.

New Applications Under 35 U.S.C. 111
If a new application is being filed and the application includes the necessary components for a filing date (see 37 CFR 1.53(b)-(d) and MPEP 506), a Filing Receipt (37 CFR 1.54) will be issued in due course and the date shown on this Acknowledgement Receipt will establish the filing date of the application.
National Stage of an International Application under 35 U.S.C. 371
If a timely submission to enter the national stage of an international application is compliant with the conditions of 35 U.S.C. 371 and other applicable requirements a Form PCT/DO/EO/903 indicating acceptance of the application as a national stage submission under 35 U.S.C. 371 will be issued in addition to the Filing Receipt, in due course.
New International Application Filed with the USPTO as a Receiving Office
If a new international application is being filed and the international application includes the necessary components for an international filing date (see PCT Article 11 and MPEP 1810), a Notification of the International Application Number and of the International Filing Date (Form PCT/RO/105) will be issued in due course, subject to prescriptions concerning national security, and the date shown on this Acknowledgement Receipt will establish the international filing date of the application.

PTO/SB/06 (09-11)
Approved for use through 1/31/2014. OMB 0651-0032
U.S. Patent and Trademark Office; U.S. DEPARTMENT OF COMMERCE

PATENT APPLICATION FEE DETERMINATION RECORD

Substitute for Form PTO-875

Application or Docket Number	Filing Date	
14/651,677	06/12/2015	☐ To be Mailed

ENTITY: ☒ LARGE ☐ SMALL ☐ MICRO

APPLICATION AS FILED – PART I

FOR	(Column 1) NUMBER FILED	(Column 2) NUMBER EXTRA	RATE ($)	FEE ($)
☐ BASIC FEE (37 CFR 1.16(a), (b), or (c))	N/A	N/A	N/A	
☐ SEARCH FEE (37 CFR 1.16(k), (i), or (m))	N/A	N/A	N/A	
☐ EXAMINATION FEE (37 CFR 1.16(o), (p), or (q))	N/A	N/A	N/A	
TOTAL CLAIMS (37 CFR 1.16(i))	minus 20 =	*	x $ =	
INDEPENDENT CLAIMS (37 CFR 1.16(h))	minus 3 =	*	x $ =	
☐ APPLICATION SIZE FEE (37 CFR 1.16(s))	If the specification and drawings exceed 100 sheets of paper, the application size fee due is $310 ($155 for small entity) for each additional 50 sheets or fraction thereof. See 35 U.S.C. 41(a)(1)(G) and 37 CFR 1.16(s).			
☐ MULTIPLE DEPENDENT CLAIM PRESENT (37 CFR 1.16(j))				
* If the difference in column 1 is less than zero, enter "0" in column 2.			TOTAL	

APPLICATION AS AMENDED – PART II

AMENDMENT

04/26/2017	(Column 1) CLAIMS REMAINING AFTER AMENDMENT		(Column 2) HIGHEST NUMBER PREVIOUSLY PAID FOR	(Column 3) PRESENT EXTRA	RATE ($)	ADDITIONAL FEE ($)
Total (37 CFR 1.16(i))	* 10	Minus	** 20	= 0	x $80 =	0
Independent (37 CFR 1.16(h))	* 1	Minus	***3	= 0	x $420 =	0
☐ Application Size Fee (37 CFR 1.16(s))						
☐ FIRST PRESENTATION OF MULTIPLE DEPENDENT CLAIM (37 CFR 1.16(j))						
					TOTAL ADD'L FEE	0

AMENDMENT

	(Column 1) CLAIMS REMAINING AFTER AMENDMENT		(Column 2) HIGHEST NUMBER PREVIOUSLY PAID FOR	(Column 3) PRESENT EXTRA	RATE ($)	ADDITIONAL FEE ($)
Total (37 CFR 1.16(i))	*	Minus	**	=	x $ =	
Independent (37 CFR 1.16(h))	*	Minus	***	=	x $ =	
☐ Application Size Fee (37 CFR 1.16(s))						
☐ FIRST PRESENTATION OF MULTIPLE DEPENDENT CLAIM (37 CFR 1.16(j))						
					TOTAL ADD'L FEE	

* If the entry in column 1 is less than the entry in column 2, write "0" in column 3.
** If the "Highest Number Previously Paid For" IN THIS SPACE is less than 20, enter "20".
*** If the "Highest Number Previously Paid For" IN THIS SPACE is less than 3, enter "3".
The "Highest Number Previously Paid For" (Total or Independent) is the highest number found in the appropriate box in column 1.

LIE
BURNELL L. ROSS

UNITED STATES PATENT AND TRADEMARK OFFICE

UNITED STATES DEPARTMENT OF COMMERCE
United States Patent and Trademark Office
Address: COMMISSIONER FOR PATENTS
P.O. Box 1450
Alexandria, Virginia 22313-1450
www.uspto.gov

NOTICE OF ALLOWANCE AND FEE(S) DUE

466 7590 06/06/2017
YOUNG & THOMPSON
209 Madison Street
Suite 500
Alexandria, VA 22314

EXAMINER
BERTRAM, ERIC D

ART UNIT	PAPER NUMBER
3766	

DATE MAILED: 06/06/2017

APPLICATION NO.	FILING DATE	FIRST NAMED INVENTOR	ATTORNEY DOCKET NO.	CONFIRMATION NO.
14/651,677	06/12/2015	Gilbert ROTA	5001-1489	4162

TITLE OF INVENTION: INSTRUMENT FOR DRILLING DENTAL ROOT CANALS

APPLN. TYPE	ENTITY STATUS	ISSUE FEE DUE	PUBLICATION FEE DUE	PREV. PAID ISSUE FEE	TOTAL FEE(S) DUE	DATE DUE
nonprovisional	UNDISCOUNTED	$960	$0	$0	$960	09/06/2017

THE APPLICATION IDENTIFIED ABOVE HAS BEEN EXAMINED AND IS ALLOWED FOR ISSUANCE AS A PATENT. PROSECUTION ON THE MERITS IS CLOSED. THIS NOTICE OF ALLOWANCE IS NOT A GRANT OF PATENT RIGHTS. THIS APPLICATION IS SUBJECT TO WITHDRAWAL FROM ISSUE AT THE INITIATIVE OF THE OFFICE OR UPON PETITION BY THE APPLICANT. SEE 37 CFR 1.313 AND MPEP 1308.

THE ISSUE FEE AND PUBLICATION FEE (IF REQUIRED) MUST BE PAID WITHIN THREE MONTHS FROM THE MAILING DATE OF THIS NOTICE OR THIS APPLICATION SHALL BE REGARDED AS ABANDONED. THIS STATUTORY PERIOD CANNOT BE EXTENDED. SEE 35 U.S.C. 151. THE ISSUE FEE DUE INDICATED ABOVE DOES NOT REFLECT A CREDIT FOR ANY PREVIOUSLY PAID ISSUE FEE IN THIS APPLICATION. IF AN ISSUE FEE HAS PREVIOUSLY BEEN PAID IN THIS APPLICATION (AS SHOWN ABOVE), THE RETURN OF PART B OF THIS FORM WILL BE CONSIDERED A REQUEST TO REAPPLY THE PREVIOUSLY PAID ISSUE FEE TOWARD THE ISSUE FEE NOW DUE.

HOW TO REPLY TO THIS NOTICE:

I. Review the ENTITY STATUS shown above. If the ENTITY STATUS is shown as SMALL or MICRO, verify whether entitlement to that entity status still applies.

If the ENTITY STATUS is the same as shown above, pay the TOTAL FEE(S) DUE shown above.

If the ENTITY STATUS is changed from that shown above, on PART B - FEE(S) TRANSMITTAL, complete section number 5 titled "Change in Entity Status (from status indicated above)".

For purposes of this notice, small entity fees are 1/2 the amount of undiscounted fees, and micro entity fees are 1/2 the amount of small entity fees.

II. PART B - FEE(S) TRANSMITTAL, or its equivalent, must be completed and returned to the United States Patent and Trademark Office (USPTO) with your ISSUE FEE and PUBLICATION FEE (if required). If you are charging the fee(s) to your deposit account, section "4b" of Part B - Fee(s) Transmittal should be completed and an extra copy of the form should be submitted. If an equivalent of Part B is filed, a request to reapply a previously paid issue fee must be clearly made, and delays in processing may occur due to the difficulty in recognizing the paper as an equivalent of Part B.

III. All communications regarding this application must give the application number. Please direct all communications prior to issuance to Mail Stop ISSUE FEE unless advised to the contrary.

IMPORTANT REMINDER: Utility patents issuing on applications filed on or after Dec. 12, 1980 may require payment of maintenance fees. It is patentee's responsibility to ensure timely payment of maintenance fees when due.

PART B - FEE(S) TRANSMITTAL

Complete and send this form, together with applicable fee(s), to: Mail **Mail Stop ISSUE FEE**
Commissioner for Patents
P.O. Box 1450
Alexandria, Virginia 22313-1450
or Fax (571)-273-2885

INSTRUCTIONS: This form should be used for transmitting the ISSUE FEE and PUBLICATION FEE (if required). Blocks 1 through 5 should be completed where appropriate. All further correspondence including the Patent, advance orders and notification of maintenance fees will be mailed to the current correspondence address as indicated unless corrected below or directed otherwise in Block 1, by (a) specifying a new correspondence address; and/or (b) indicating a separate "FEE ADDRESS" for maintenance fee notifications.

CURRENT CORRESPONDENCE ADDRESS (**Note:** Use Block 1 for any change of address)

466 7590 06/06/2017
YOUNG & THOMPSON
209 Madison Street
Suite 500
Alexandria, VA 22314

Note: A certificate of mailing can only be used for domestic mailings of the Fee(s) Transmittal. This certificate cannot be used for any other accompanying papers. Each additional paper, such as an assignment or formal drawing, must have its own certificate of mailing or transmission.

Certificate of Mailing or Transmission

I hereby certify that this Fee(s) Transmittal is being deposited with the United States Postal Service with sufficient postage for first class mail in an envelope addressed to the Mail Stop ISSUE FEE address above, or being facsimile transmitted to the USPTO (571) 273-2885, on the date indicated below.

(Depositor's name)
(Signature)
(Date)

APPLICATION NO.	FILING DATE	FIRST NAMED INVENTOR	ATTORNEY DOCKET NO.	CONFIRMATION NO.
14/651,677	06/12/2015	Gilbert ROTA	5001-1489	4162

TITLE OF INVENTION: INSTRUMENT FOR DRILLING DENTAL ROOT CANALS

APPLN. TYPE	ENTITY STATUS	ISSUE FEE DUE	PUBLICATION FEE DUE	PREV. PAID ISSUE FEE	TOTAL FEE(S) DUE	DATE DUE
nonprovisional	UNDISCOUNTED	$960	$0	$0	$960	09/06/2017

EXAMINER	ART UNIT	CLASS-SUBCLASS
BERTRAM, ERIC D	3766	433-102000

1. Change of correspondence address or indication of "Fee Address" (37 CFR 1.363).

❑ Change of correspondence address (or Change of Correspondence Address form PTO/SB/122) attached.

❑ "Fee Address" indication (or "Fee Address" Indication form PTO/SB/47; Rev 03-02 or more recent) attached. **Use of a Customer Number is required.**

2. For printing on the patent front page, list

(1) The names of up to 3 registered patent attorneys or agents OR, alternatively,

(2) The name of a single firm (having as a member a registered attorney or agent) and the names of up to 2 registered patent attorneys or agents. If no name is listed, no name will be printed.

1_____
2_____
3_____

3. ASSIGNEE NAME AND RESIDENCE DATA TO BE PRINTED ON THE PATENT (print or type)

PLEASE NOTE: Unless an assignee is identified below, no assignee data will appear on the patent. If an assignee is identified below, the document has been filed for recordation as set forth in 37 CFR 3.11. Completion of this form is NOT a substitute for filing an assignment.

(A) NAME OF ASSIGNEE (B) RESIDENCE: (CITY and STATE OR COUNTRY)

Please check the appropriate assignee category or categories (will not be printed on the patent) : ❑ Individual ❑ Corporation or other private group entity ❑ Government

4a. The following fee(s) are submitted:

❑ Issue Fee
❑ Publication Fee (No small entity discount permitted)
❑ Advance Order - # of Copies _____

4b. Payment of Fee(s): (**Please first reapply any previously paid issue fee shown above**)

❑ A check is enclosed.
❑ Payment by credit card. Form PTO-2038 is attached.
❑ The director is hereby authorized to charge the required fee(s), any deficiency, or credits any overpayment, to Deposit Account Number _____ (enclose an extra copy of this form).

5. **Change in Entity Status** (from status indicated above)

❑ Applicant certifying micro entity status. See 37 CFR 1.29 — NOTE: Absent a valid certification of Micro Entity Status (see forms PTO/SB/15A and 15B), issue fee payment in the micro entity amount will not be accepted at the risk of application abandonment.

❑ Applicant asserting small entity status. See 37 CFR 1.27 — NOTE: If the application was previously under micro entity status, checking this box will be taken to be a notification of loss of entitlement to micro entity status.

❑ Applicant changing to regular undiscounted fee status. — NOTE: Checking this box will be taken to be a notification of loss of entitlement to small or micro entity status, as applicable.

NOTE: This form must be signed in accordance with 37 CFR 1.31 and 1.33. See 37 CFR 1.4 for signature requirements and certifications.

Authorized Signature _____ Date _____

Typed or printed name _____ Registration No. _____

UNITED STATES DEPARTMENT OF COMMERCE
United States Patent and Trademark Office
Address: COMMISSIONER FOR PATENTS
P.O. Box 1450
Alexandria, Virginia 22313-1450
www.uspto.gov

APPLICATION NO.	FILING DATE	FIRST NAMED INVENTOR	ATTORNEY DOCKET NO.	CONFIRMATION NO.
14/651,677	06/12/2015	Gilbert ROTA	5001-1489	4162

466 7590 06/06/2017
YOUNG & THOMPSON
209 Madison Street
Suite 500
Alexandria, VA 22314

EXAMINER
BERTRAM, ERIC D

ART UNIT	PAPER NUMBER
3766	

DATE MAILED: 06/06/2017

Determination of Patent Term Adjustment under 35 U.S.C. 154 (b)
(Applications filed on or after May 29, 2000)

The Office has discontinued providing a Patent Term Adjustment (PTA) calculation with the Notice of Allowance.

Section 1(h)(2) of the AIA Technical Corrections Act amended 35 U.S.C. 154(b)(3)(B)(i) to eliminate the requirement that the Office provide a patent term adjustment determination with the notice of allowance. See Revisions to Patent Term Adjustment, 78 Fed. Reg. 19416, 19417 (Apr. 1, 2013). Therefore, the Office is no longer providing an initial patent term adjustment determination with the notice of allowance. The Office will continue to provide a patent term adjustment determination with the Issue Notification Letter that is mailed to applicant approximately three weeks prior to the issue date of the patent, and will include the patent term adjustment on the patent. Any request for reconsideration of the patent term adjustment determination (or reinstatement of patent term adjustment) should follow the process outlined in 37 CFR 1.705.

Any questions regarding the Patent Term Extension or Adjustment determination should be directed to the Office of Patent Legal Administration at (571)-272-7702. Questions relating to issue and publication fee payments should be directed to the Customer Service Center of the Office of Patent Publication at 1-(888)-786-0101 or (571)-272-4200.

OMB Clearance and PRA Burden Statement for PTOL-85 Part B

The Paperwork Reduction Act (PRA) of 1995 requires Federal agencies to obtain Office of Management and Budget approval before requesting most types of information from the public. When OMB approves an agency request to collect information from the public, OMB (i) provides a valid OMB Control Number and expiration date for the agency to display on the instrument that will be used to collect the information and (ii) requires the agency to inform the public about the OMB Control Number's legal significance in accordance with 5 CFR 1320.5(b).

The information collected by PTOL-85 Part B is required by 37 CFR 1.311. The information is required to obtain or retain a benefit by the public which is to file (and by the USPTO to process) an application. Confidentiality is governed by 35 U.S.C. 122 and 37 CFR 1.14. This collection is estimated to take 12 minutes to complete, including gathering, preparing, and submitting the completed application form to the USPTO. Time will vary depending upon the individual case. Any comments on the amount of time you require to complete this form and/or suggestions for reducing this burden, should be sent to the Chief Information Officer, U.S. Patent and Trademark Office, U.S. Department of Commerce, P.O. Box 1450, Alexandria, Virginia 22313-1450. DO NOT SEND FEES OR COMPLETED FORMS TO THIS ADDRESS. SEND TO: Commissioner for Patents, P.O. Box 1450, Alexandria, Virginia 22313-1450. Under the Paperwork Reduction Act of 1995, no persons are required to respond to a collection of information unless it displays a valid OMB control number.

Privacy Act Statement

The Privacy Act of 1974 (P.L. 93-579) requires that you be given certain information in connection with your submission of the attached form related to a patent application or patent. Accordingly, pursuant to the requirements of the Act, please be advised that: (1) the general authority for the collection of this information is 35 U.S.C. 2(b)(2); (2) furnishing of the information solicited is voluntary; and (3) the principal purpose for which the information is used by the U.S. Patent and Trademark Office is to process and/or examine your submission related to a patent application or patent. If you do not furnish the requested information, the U.S. Patent and Trademark Office may not be able to process and/or examine your submission, which may result in termination of proceedings or abandonment of the application or expiration of the patent.

The information provided by you in this form will be subject to the following routine uses:

1. The information on this form will be treated confidentially to the extent allowed under the Freedom of Information Act (5 U.S.C. 552) and the Privacy Act (5 U.S.C 552a). Records from this system of records may be disclosed to the Department of Justice to determine whether disclosure of these records is required by the Freedom of Information Act.
2. A record from this system of records may be disclosed, as a routine use, in the course of presenting evidence to a court, magistrate, or administrative tribunal, including disclosures to opposing counsel in the course of settlement negotiations.
3. A record in this system of records may be disclosed, as a routine use, to a Member of Congress submitting a request involving an individual, to whom the record pertains, when the individual has requested assistance from the Member with respect to the subject matter of the record.
4. A record in this system of records may be disclosed, as a routine use, to a contractor of the Agency having need for the information in order to perform a contract. Recipients of information shall be required to comply with the requirements of the Privacy Act of 1974, as amended, pursuant to 5 U.S.C. 552a(m).
5. A record related to an International Application filed under the Patent Cooperation Treaty in this system of records may be disclosed, as a routine use, to the International Bureau of the World Intellectual Property Organization, pursuant to the Patent Cooperation Treaty.
6. A record in this system of records may be disclosed, as a routine use, to another federal agency for purposes of National Security review (35 U.S.C. 181) and for review pursuant to the Atomic Energy Act (42 U.S.C. 218(c)).
7. A record from this system of records may be disclosed, as a routine use, to the Administrator, General Services, or his/her designee, during an inspection of records conducted by GSA as part of that agency's responsibility to recommend improvements in records management practices and programs, under authority of 44 U.S.C. 2904 and 2906. Such disclosure shall be made in accordance with the GSA regulations governing inspection of records for this purpose, and any other relevant (i.e., GSA or Commerce) directive. Such disclosure shall not be used to make determinations about individuals.
8. A record from this system of records may be disclosed, as a routine use, to the public after either publication of the application pursuant to 35 U.S.C. 122(b) or issuance of a patent pursuant to 35 U.S.C. 151. Further, a record may be disclosed, subject to the limitations of 37 CFR 1.14, as a routine use, to the public if the record was filed in an application which became abandoned or in which the proceedings were terminated and which application is referenced by either a published application, an application open to public inspection or an issued patent.
9. A record from this system of records may be disclosed, as a routine use, to a Federal, State, or local law enforcement agency, if the USPTO becomes aware of a violation or potential violation of law or regulation.

Notice of Allowability	Application No. 14/651,677	Applicant(s) ROTA ET AL.	
	Examiner Eric D. Bertram	Art Unit 3766	AIA (First Inventor to File) Status No

-- The MAILING DATE of this communication appears on the cover sheet with the correspondence address--

All claims being allowable, PROSECUTION ON THE MERITS IS (OR REMAINS) CLOSED in this application. If not included herewith (or previously mailed), a Notice of Allowance (PTOL-85) or other appropriate communication will be mailed in due course. **THIS NOTICE OF ALLOWABILITY IS NOT A GRANT OF PATENT RIGHTS.** This application is subject to withdrawal from issue at the initiative of the Office or upon petition by the applicant. See 37 CFR 1.313 and MPEP 1308.

1. ☒ This communication is responsive to *an amendment filed on 4/26/2017*.
   ☐ A declaration(s)/affidavit(s) under **37 CFR 1.130(b)** was/were filed on_____.
2. ☐ An election was made by the applicant in response to a restriction requirement set forth during the interview on _____; the restriction requirement and election have been incorporated into this action.
3. ☒ The allowed claim(s) is/are *1-10*. As a result of the allowed claim(s), you may be eligible to benefit from the **Patent Prosecution Highway** program at a participating intellectual property office for the corresponding application. For more information, please see http://www.uspto.gov/patents/init_events/pph/index.jsp or send an inquiry to PPHfeedback@uspto.gov.
4. ☒ Acknowledgment is made of a claim for foreign priority under 35 U.S.C. § 119(a)-(d) or (f).

   Certified copies:

   a) ☒ All b) ☐ Some *c) ☐ None of the:
   1. ☐ Certified copies of the priority documents have been received.
   2. ☐ Certified copies of the priority documents have been received in Application No. _____ .
   3. ☒ Copies of the certified copies of the priority documents have been received in this national stage application from the International Bureau (PCT Rule 17.2(a)).

   * Certified copies not received: _____.

Applicant has THREE MONTHS FROM THE "MAILING DATE" of this communication to file a reply complying with the requirements noted below. Failure to timely comply will result in ABANDONMENT of this application.
THIS THREE-MONTH PERIOD IS NOT EXTENDABLE.

5. ☐ CORRECTED DRAWINGS (as "replacement sheets") must be submitted.
   ☐ including changes required by the attached Examiner's Amendment / Comment or in the Office action of Paper No./Mail Date _____.

   Identifying indicia such as the application number (see 37 CFR 1.84(c)) should be written on the drawings in the front (not the back) of each sheet. Replacement sheet(s) should be labeled as such in the header according to 37 CFR 1.121(d).
6. ☐ DEPOSIT OF and/or INFORMATION about the deposit of BIOLOGICAL MATERIAL must be submitted. Note the attached Examiner's comment regarding REQUIREMENT FOR THE DEPOSIT OF BIOLOGICAL MATERIAL.

Attachment(s)

1. ☐ Notice of References Cited (PTO-892)
2. ☒ Information Disclosure Statements (PTO/SB/08), Paper No./Mail Date 3/13/2017
3. ☐ Examiner's Comment Regarding Requirement for Deposit of Biological Material
4. ☐ Interview Summary (PTO-413), Paper No./Mail Date _____ .
5. ☐ Examiner's Amendment/Comment
6. ☐ Examiner's Statement of Reasons for Allowance
7. ☐ Other _____.

/Eric D. Bertram/
Primary Examiner, Art Unit 3766

Issue Classification	Application/Control No.	Applicant(s)/Patent Under Reexamination
	14651677	ROTA ET AL.
	Examiner	**Art Unit**
	ERIC D BERTRAM	3766

CPC						
Symbol					**Type**	**Version**
A61C		5	/	023	F	2013-01-01
A61C		5	/	42	I	2017-02-01
			/			
			/			
			/			
			/			
			/			
			/			
			/			
			/			
			/			
			/			
			/			
			/			
			/			

CPC Combination Sets								
Symbol					**Type**	**Set**	**Ranking**	**Version**
			/					
			/					

NONE (Assistant Examiner)	(Date)	**Total Claims Allowed:** 10	
/ERIC D. BERTRAM/ Primary Examiner, Art Unit 3766 (Primary Examiner)	05/23/2017 (Date)	O.G. Print Claim(s) 1	O.G. Print Figure 8

Issue Classification	Application/Control No.	Applicant(s)/Patent Under Reexamination
	14651677	ROTA ET AL.
	Examiner	**Art Unit**
	ERIC D BERTRAM	3766

US ORIGINAL CLASSIFICATION		INTERNATIONAL CLASSIFICATION	
CLASS	SUBCLASS	CLAIMED	NON-CLAIMED
		A 6 1 C 5 / 00 (2006.01.01)	

CROSS REFERENCE(S)					
CLASS	SUBCLASS (ONE SUBCLASS PER BLOCK)				

NONE		Total Claims Allowed:	
(Assistant Examiner)	(Date)	10	
/ERIC D. BERTRAM/ Primary Examiner, Art Unit 3766	05/23/2017	O.G. Print Claim(s)	O.G. Print Figure
(Primary Examiner)	(Date)	1	8

Issue Classification	Application/Control No.	Applicant(s)/Patent Under Reexamination
	14651677	ROTA ET AL.
	Examiner	**Art Unit**
	ERIC D BERTRAM	3766

☐ Claims renumbered in the same order as presented by applicant ☐ CPA ☐ T.D. ☐ R.1.47

Final	Original	Final	Original	Final	Original	Final	Original	Final	Original	Final	Original	Final	Original	Final	Original
1	1														
2	2														
3	3														
5	4														
6	5														
7	6														
8	7														
9	8														
10	9														
4	10														

NONE (Assistant Examiner)	(Date)	**Total Claims Allowed:** 10	
/ERIC D. BERTRAM/ Primary Examiner, Art Unit 3766 (Primary Examiner)	05/23/2017 (Date)	O.G. Print Claim(s) 1	O.G. Print Figure 8

U.S. Patent and Trademark Office Part of Paper No. 20170523

EAST Search History

EAST Search History (Prior Art)

Ref #	Hits	Search Query	DBs	Default Operator	Plurals	Time Stamp
L2	2	(("20120219927") or ("20120093944")).PN.	US-PGPUB; USPAT; USOCR; EPO; JPO	OR	OFF	2017/05/23 12:40
L3	2	(("7731498") or ("8454361")).PN.	US-PGPUB; USPAT; USOCR; EPO; JPO	OR	OFF	2017/05/23 12:42
L4	57	("0251598" | "20040023186" | "20040131993" | "20040185414" | "20040219484" | "20040219485" | "20050266375" | "20050272004" | "20060216668" | "20070184406" | "20110217673" | "4044468" | "4260379" | "4353698" | "4457710" | "4536159" | "4538989" | "4824370" | "4871312" | "4889487" | "4934934" | "4992048" | "5035617" | "5236357" | "5464362" | "5503554" | "5605460" | "5676541" | "5692902" | "5735689" | "5775904" | "5836764" | "5842862" | "5882198" | "5897316" | "5902106" | "5921775" | "5938440" | "6074209" | "6106296" | "6206695" | "6267592" | "6299445" | "6315558" | "6419488" | "6428317" | "6702579" | "6929078" | "7125252").PN. OR ("7731498" | "8454361").URPN.	US-PGPUB; USPAT; USOCR	OR	OFF	2017/05/23 12:43
L5	50	4 and @ad<"20130130"	US-PGPUB; USPAT; USOCR	OR	OFF	2017/05/23 12:43
L6	52	4 and @ad<"20130607"	US-PGPUB; USPAT; USOCR	OR	OFF	2017/05/23 12:43
L7	2	6 and offset with axis	US-PGPUB; USPAT; USOCR	OR	OFF	2017/05/23 12:48
L8	97	(dental or tooth or teeth or root with canal) and ((rat with tail with file) or (barbed with broach) or drill or file) and offset with axis same center with mass	US-PGPUB; USPAT; EPO; JPO	OR	ON	2017/05/23 12:57
L9	72	8 and @ad<"20130607"	US-PGPUB;	OR	OFF	2017/05/23 12:59

			USPAT; USOCR			
L10	1	("7955078").PN.	US-PGPUB; USPAT; USOCR; EPO; JPO	OR	OFF	2017/05/23 12:59
L11	22	(dental or tooth or teeth or root with canal) and ((rat with tail with file) or (barbed with broach) or drill or file and instrument) same offset with axis same center with mass	US-PGPUB; USPAT; EPO; JPO	OR	ON	2017/05/23 12:59
L12	38	(dental or tooth or teeth or root with canal) and ((rat with tail with file) or (barbed with broach) or drill or file or instrument) same offset with axis same center with mass	US-PGPUB; USPAT; EPO; JPO	OR	ON	2017/05/23 13:00
L13	23	12 and @ad<"20130607"	US-PGPUB; USPAT; USOCR	OR	OFF	2017/05/23 13:00
L16	615	a61c5/42.cpc.	US-PGPUB; USPAT; EPO; JPO	OR	OFF	2017/05/23 13:13
S1	8	rota-gilbert$.in. vallotton-paul$.in.	US-PGPUB; USPAT; EPO; JPO	OR	OFF	2016/08/05 12:08
S2	1	S1 and mass.clm.	US-PGPUB; USPAT; EPO; JPO	OR	OFF	2016/08/05 12:08
S3	4	(("7955078") or ("20060265858") or ("20050100859") or ("20050282109")).PN.	US-PGPUB; USPAT; USOCR; EPO; JPO	OR	OFF	2016/08/05 12:09
S4	546	a61c5/023.cpc.	US-PGPUB; USPAT; EPO; JPO	OR	OFF	2016/08/05 12:13
S5	23	S4 and (centre or center) with mass	US-PGPUB; USPAT; EPO; JPO	OR	ON	2016/08/05 12:37
S6	14	S4 and (centre or center) with mass same (alternat$4 or vary$4 or chang$4 or offset$4)	US-PGPUB; USPAT; EPO; JPO	OR	ON	2016/08/05 12:38
S7	559	a61c5/023.cpc.	US-PGPUB;	OR	OFF	2017/01/24 09:49

			USPAT; EPO; JPO			
S8	23	S7 and cent$2 near2 mass	US-PGPUB; USPAT; EPO; JPO	OR	OFF	2017/01/24 09:49
S9	23	S7 and cent$2 near2 mass same axis with rotation	US-PGPUB; USPAT; EPO; JPO	OR	OFF	2017/01/24 09:49
S10	102	(rat with tail with file) or (barbed with broach)	US-PGPUB; USPAT; EPO; JPO	OR	OFF	2017/01/24 09:57
S11	93	(rat with tail with file) or (barbed with broach) and root with canal	US-PGPUB; USPAT; EPO; JPO	OR	OFF	2017/01/24 09:57

5/ 23/ 2017 1:15:53 PM
C:\ Users\ ebertram\ Documents\ EAST\ Workspaces\ 14651677.wsp

Doc code: IDS
Doc description: Information Disclosure Statement (IDS) Filed

PTO/SB/08a (01-10)
Approved for use through 07/31/2012. OMB 0651-0031
U.S. Patent and Trademark Office; U.S. DEPARTMENT OF COMMERCE

INFORMATION DISCLOSURE STATEMENT BY APPLICANT

(Not for submission under 37 CFR 1.99)

Application Number	14651677
Filing Date	2015-06-12
First Named Inventor	Gilbert ROTA
Art Unit	3766
Examiner Name	Eric BERTRAM
Attorney Docket Number	5001-1489

U.S.PATENTS Remove

Examiner Initial*	Cite No	Patent Number	Kind Code[1]	Issue Date	Name of Patentee or Applicant of cited Document	Pages,Columns,Lines where Relevant Passages or Relevant Figures Appear
	1					

If you wish to add additional U.S. Patent citation information please click the Add button. Add

U.S.PATENT APPLICATION PUBLICATIONS Remove

Examiner Initial*	Cite No	Publication Number	Kind Code[1]	Publication Date	Name of Patentee or Applicant of cited Document	Pages,Columns,Lines where Relevant Passages or Relevant Figures Appear
	1					

If you wish to add additional U.S. Published Application citation information please click the Add button. Add

FOREIGN PATENT DOCUMENTS Remove

Examiner Initial*	Cite No	Foreign Document Number[3]	Country Code[2] i	Kind Code[4]	Publication Date	Name of Patentee or Applicant of cited Document	Pages,Columns,Lines where Relevant Passages or Relevant Figures Appear	T[5]
	1	2009502349	JP		2009-01-29		English Abstract of US 2007026360; Cited in Japanese Office Action	
	2	2012038437	WO		2012-03-29		English Abstract; Cited in Japanese Office Action	

If you wish to add additional Foreign Patent Document citation information please click the Add button Add

NON-PATENT LITERATURE DOCUMENTS Remove

ALL REFERENCES CONSIDERED EXCEPT WHERE LINED THROUGH. /EDB/

INFORMATION DISCLOSURE STATEMENT BY APPLICANT

(Not for submission under 37 CFR 1.99)

Application Number	14651677
Filing Date	2015-06-12
First Named Inventor	Gilbert ROTA
Art Unit	3766
Examiner Name	Eric BERTRAM
Attorney Docket Number	5001-1489

Examiner Initials*	Cite No	Include name of the author (in CAPITAL LETTERS), title of the article (when appropriate), title of the item (book, magazine, journal, serial, symposium, catalog, etc), date, pages(s), volume-issue number(s), publisher, city and/or country where published.	T[5]
	1	Japanese Office Action dated January 18, 2017; Application No. 2015-554257	

If you wish to add additional non-patent literature document citation information please click the Add button Add

EXAMINER SIGNATURE

Examiner Signature	/Eric D. Bertram/	Date Considered	05/23/2017

*EXAMINER: Initial if reference considered, whether or not citation is in conformance with MPEP 609. Draw line through a citation if not in conformance and not considered. Include copy of this form with next communication to applicant.

[1] See Kind Codes of USPTO Patent Documents at www.USPTO.GOV or MPEP 901.04. [2] Enter office that issued the document, by the two-letter code (WIPO Standard ST.3). [3] For Japanese patent documents, the indication of the year of the reign of the Emperor must precede the serial number of the patent document. [4] Kind of document by the appropriate symbols as indicated on the document under WIPO Standard ST.16 if possible. [5] Applicant is to place a check mark here if English language translation is attached.

ALL REFERENCES CONSIDERED EXCEPT WHERE LINED THROUGH. /EDB/

INFORMATION DISCLOSURE STATEMENT BY APPLICANT

(Not for submission under 37 CFR 1.99)

Application Number	14651677
Filing Date	2015-06-12
First Named Inventor	Gilbert ROTA
Art Unit	3766
Examiner Name	Eric BERTRAM
Attorney Docket Number	5001-1489

CERTIFICATION STATEMENT

Please see 37 CFR 1.97 and 1.98 to make the appropriate selection(s):

X That each item of information contained in the information disclosure statement was first cited in any communication from a foreign patent office in a counterpart foreign application not more than three months prior to the filing of the information disclosure statement. See 37 CFR 1.97(e)(1).

OR

☐ That no item of information contained in the information disclosure statement was cited in a communication from a foreign patent office in a counterpart foreign application, and, to the knowledge of the person signing the certification after making reasonable inquiry, no item of information contained in the information disclosure statement was known to any individual designated in 37 CFR 1.56(c) more than three months prior to the filing of the information disclosure statement. See 37 CFR 1.97(e)(2).

X See attached certification statement.

The fee set forth in 37 CFR 1.17 (p) has been submitted herewith.

A certification statement is not submitted herewith.

SIGNATURE

A signature of the applicant or representative is required in accordance with CFR 1.33, 10.18. Please see CFR 1.4(d) for the form of the signature.

Signature	/Eric Jensen/	Date (YYYY-MM-DD)	2017-03-13
Name/Print	Eric Jensen	Registration Number	37,855

This collection of information is required by 37 CFR 1.97 and 1.98. The information is required to obtain or retain a benefit by the public which is to file (and by the USPTO to process) an application. Confidentiality is governed by 35 U.S.C. 122 and 37 CFR 1.14. This collection is estimated to take 1 hour to complete, including gathering, preparing and submitting the completed application form to the USPTO. Time will vary depending upon the individual case. Any comments on the amount of time you require to complete this form and/or suggestions for reducing this burden, should be sent to the Chief Information Officer, U.S. Patent and Trademark Office, U.S. Department of Commerce, P.O. Box 1450, Alexandria, VA 22313-1450. DO NOT SEND FEES OR COMPLETED FORMS TO THIS ADDRESS. **SEND TO: Commissioner for Patents, P.O. Box 1450, Alexandria, VA 22313-1450.**

Privacy Act Statement

The Privacy Act of 1974 (P.L. 93-579) requires that you be given certain information in connection with your submission of the attached form related to a patent application or patent. Accordingly, pursuant to the requirements of the Act, please be advised that: (1) the general authority for the collection of this information is 35 U.S.C. 2(b)(2); (2) furnishing of the information solicited is voluntary; and (3) the principal purpose for which the information is used by the U.S. Patent and Trademark Office is to process and/or examine your submission related to a patent application or patent. If you do not furnish the requested information, the U.S. Patent and Trademark Office may not be able to process and/or examine your submission, which may result in termination of proceedings or abandonment of the application or expiration of the patent.

The information provided by you in this form will be subject to the following routine uses:

1. The information on this form will be treated confidentially to the extent allowed under the Freedom of Information Act (5 U.S.C. 552) and the Privacy Act (5 U.S.C. 552a). Records from this system of records may be disclosed to the Department of Justice to determine whether the Freedom of Information Act requires disclosure of these record s.

2. A record from this system of records may be disclosed, as a routine use, in the course of presenting evidence to a court, magistrate, or administrative tribunal, including disclosures to opposing counsel in the course of settlement negotiations.

3. A record in this system of records may be disclosed, as a routine use, to a Member of Congress submitting a request involving an individual, to whom the record pertains, when the individual has requested assistance from the Member with respect to the subject matter of the record.

4. A record in this system of records may be disclosed, as a routine use, to a contractor of the Agency having need for the information in order to perform a contract. Recipients of information shall be required to comply with the requirements of the Privacy Act of 1974, as amended, pursuant to 5 U.S.C. 552a(m).

5. A record related to an International Application filed under the Patent Cooperation Treaty in this system of records may be disclosed, as a routine use, to the International Bureau of the World Intellectual Property Organization, pursuant to the Patent Cooperation Treaty.

6. A record in this system of records may be disclosed, as a routine use, to another federal agency for purposes of National Security review (35 U.S.C. 181) and for review pursuant to the Atomic Energy Act (42 U.S.C. 218(c)).

7. A record from this system of records may be disclosed, as a routine use, to the Administrator, General Services, or his/her designee, during an inspection of records conducted by GSA as part of that agency's responsibility to recommend improvements in records management practices and programs, under authority of 44 U.S.C. 2904 and 2906. Such disclosure shall be made in accordance with the GSA regulations governing inspection of records for this purpose, and any other relevant (i.e., GSA or Commerce) directive. Such disclosure shall not be used to make determinations about individuals.

8. A record from this system of records may be disclosed, as a routine use, to the public after either publication of the application pursuant to 35 U.S.C. 122(b) or issuance of a patent pursuant to 35 U.S.C. 151. Further, a record may be disclosed, subject to the limitations of 37 CFR 1.14, as a routine use, to the public if the record was filed in an application which became abandoned or in which the proceedings were terminated and which application is referenced by either a published application, an application open to public inspections or an issued patent.

9. A record from this system of records may be disclosed, as a routine use, to a Federal, State, or local law enforcement agency, if the USPTO becomes aware of a violation or potential violation of law or regulation.

UNITED STATES PATENT AND TRADEMARK OFFICE

UNITED STATES DEPARTMENT OF COMMERCE
United States Patent and Trademark Office
Address: COMMISSIONER FOR PATENTS
P.O. Box 1450
Alexandria, Virginia 22313-1450
www.uspto.gov

BIB DATA SHEET

CONFIRMATION NO. 4162

SERIAL NUMBER	FILING or 371(c) DATE	CLASS	GROUP ART UNIT	ATTORNEY DOCKET NO.
14/651,677	06/12/2015 RULE	433	3766	5001-1489

APPLICANTS
MAILLEFER INSTRUMENTS HOLDING SARL, Ballaigues, SWITZERLAND;

INVENTORS
Gilbert ROTA, Vaux et Chantegrue, FRANCE;
Paul-Henri VALLOTTON, Pampigny, SWITZERLAND;

**** CONTINUING DATA ****************************
This application is a 371 of PCT/IB2013/001191 06/07/2013

**** FOREIGN APPLICATIONS ****************************
INTERNATIONAL BUREAU OF THE WORLD INTELL PCT/IB2013/000108 01/30/2013

**** IF REQUIRED, FOREIGN FILING LICENSE GRANTED ****
08/03/2015

		STATE OR COUNTRY	SHEETS DRAWINGS	TOTAL CLAIMS	INDEPENDENT CLAIMS
Foreign Priority claimed ☑ Yes ☐ No 35 USC 119(a-d) conditions met ☑ Yes ☐ No Verified and Acknowledged /ERIC D BERTRAM/ Examiner's Signature	☐ Met after Allowance Initials	FRANCE	4	10	1

ADDRESS
YOUNG & THOMPSON
209 Madison Street
Suite 500
Alexandria, VA 22314
UNITED STATES

TITLE
INSTRUMENT FOR DRILLING DENTAL ROOT CANALS

FILING FEE RECEIVED		
1480	FEES: Authority has been given in Paper No._____ to charge/credit DEPOSIT ACCOUNT No._____ for following:	☐ All Fees ☐ 1.16 Fees (Filing) ☐ 1.17 Fees (Processing Ext. of time) ☐ 1.18 Fees (Issue) ☐ Other _____ ☐ Credit

Search Notes	Application/Control No.	Applicant(s)/Patent Under Reexamination
	14651677	ROTA ET AL.
	Examiner	**Art Unit**
	ERIC D BERTRAM	3766

CPC- SEARCHED

Symbol	Date	Examiner
A61C 5/023	8/5/2016	EDB
A61C 5/42	5/23/2017	EDB

CPC COMBINATION SETS - SEARCHED

Symbol	Date	Examiner

US CLASSIFICATION SEARCHED

Class	Subclass	Date	Examiner

SEARCH NOTES

Search Notes	Date	Examiner
EAST text search	8/5/16	EDB
Inventor search	8/5/16	EDB
EAST text search	1/24/17	EDB
EAST text search	5/23/2017	EDB

INTERFERENCE SEARCH

US Class/ CPC Symbol	US Subclass / CPC Group	Date	Examiner
USPAT and PGPUB	text search - see attached	5/23/2017	EDB

PTO/SB/30EFS (07-14)
Approved for use through 07/31/2016. OMB 0651-0031
U.S. Patent and Trademark Office; U.S. DEPARTMENT OF COMMERCE

REQUEST FOR CONTINUED EXAMINATION(RCE)TRANSMITTAL
(Submitted Only via EFS-Web)

Application Number	14651677	Filing Date	2015-06-12	Docket Number (if applicable)	5001-1489	Art Unit	3766
First Named Inventor	Gilbert ROTA			Examiner Name	Eric D. BERTRAM		

This is a Request for Continued Examination (RCE) under 37 CFR 1.114 of the above-identified application.
Request for Continued Examination (RCE) practice under 37 CFR 1.114 does not apply to any utility or plant application filed prior to June 8, 1995, to any international application that does not comply with the requirements of 35 U.S.C. 371, or to any design application. The Instruction Sheet for this form is located at WWW.USPTO.GOV.

SUBMISSION REQUIRED UNDER 37 CFR 1.114

Note: If the RCE is proper, any previously filed unentered amendments and amendments enclosed with the RCE will be entered in the order in which they were filed unless applicant instructs otherwise. If applicant does not wish to have any previously filed unentered amendment(s) entered, applicant must request non-entry of such amendment(s).

☐ Previously submitted. If a final Office action is outstanding, any amendments filed after the final Office action may be considered as a submission even if this box is not checked.

- ☐ Consider the arguments in the Appeal Brief or Reply Brief previously filed on _____
- ☐ Other _____

☒ Enclosed

- ☐ Amendment/Reply
- ☒ Information Disclosure Statement (IDS)
- ☐ Affidavit(s)/ Declaration(s)
- ☐ Other _____

MISCELLANEOUS

☐ Suspension of action on the above-identified application is requested under 37 CFR 1.103(c) for a period of months _____
(Period of suspension shall not exceed 3 months; Fee under 37 CFR 1.17(i) required)

☒ Other
The RCE fee is being paid online simultaneously herewith by credit card.

FEES

The RCE fee under 37 CFR 1.17(e) is required by 37 CFR 1.114 when the RCE is filed.
☒ The Director is hereby authorized to charge any underpayment of fees, or credit any overpayments, to Deposit Account No 250120

SIGNATURE OF APPLICANT, ATTORNEY, OR AGENT REQUIRED

☒ Patent Practitioner Signature

Applicant Signature

PTO/SB/30EFS (07-14)
Approved for use through 07/31/2016. OMB 0651-0031
U.S. Patent and Trademark Office; U.S. DEPARTMENT OF COMMERCE

Signature of Registered U.S. Patent Practitioner			
Signature	/Eric Jensen/	Date (YYYY-MM-DD)	2017-08-25
Name	Eric Jensen	Registration Number	37855

This collection of information is required by 37 CFR 1.114. The information is required to obtain or retain a benefit by the public which is to file (and by the USPTO to process) an application. Confidentiality is governed by 35 U.S.C. 122 and 37 CFR 1.11 and 1.14. This collection is estimated to take 12 minutes to complete, including gathering, preparing, and submitting the completed application form to the USPTO. Time will vary depending upon the individual case. Any comments on the amount of time you require to complete this form and/or suggestions for reducing this burden, should be sent to the Chief Information Officer, U.S. Patent and Trademark Office, U.S. Department of Commerce, P.O. Box 1450, Alexandria, VA 22313-1450.

If you need assistance in completing the form, call 1-800-PTO-9199 and select option 2.

Privacy Act Statement

The Privacy Act of 1974 (P.L. 93-579) requires that you be given certain information in connection with your submission of the attached form related to a patent application or patent. Accordingly, pursuant to the requirements of the Act, please be advised that: (1) the general authority for the collection of this information is 35 U.S.C. 2(b)(2); (2) furnishing of the information solicited is voluntary; and (3) the principal purpose for which the information is used by the U.S. Patent and Trademark Office is to process and/or examine your submission related to a patent application or patent. If you do not furnish the requested information, the U.S. Patent and Trademark Office may not be able to process and/or examine your submission, which may result in termination of proceedings or abandonment of the application or expiration of the patent.

The information provided by you in this form will be subject to the following routine uses:

1. The information on this form will be treated confidentially to the extent allowed under the Freedom of Information Act (5 U.S.C. 552) and the Privacy Act (5 U.S.C. 552a). Records from this system of records may be disclosed to the Department of Justice to determine whether the Freedom of Information Act requires disclosure of these records.

2. A record from this system of records may be disclosed, as a routine use, in the course of presenting evidence to a court, magistrate, or administrative tribunal, including disclosures to opposing counsel in the course of settlement negotiations.

3. A record in this system of records may be disclosed, as a routine use, to a Member of Congress submitting a request involving an individual, to whom the record pertains, when the individual has requested assistance from the Member with respect to the subject matter of the record.

4. A record in this system of records may be disclosed, as a routine use, to a contractor of the Agency having need for the information in order to perform a contract. Recipients of information shall be required to comply with the requirements of the Privacy Act of 1974, as amended, pursuant to 5 U.S.C. 552a(m).

5. A record related to an International Application filed under the Patent Cooperation Treaty in this system of records may be disclosed, as a routine use, to the International Bureau of the World Intellectual Property Organization, pursuant to the Patent Cooperation Treaty.

6. A record in this system of records may be disclosed, as a routine use, to another federal agency for purposes of National Security review (35 U.S.C. 181) and for review pursuant to the Atomic Energy Act (42 U.S.C. 218(c)).

7. A record from this system of records may be disclosed, as a routine use, to the Administrator, General Services, or his/her designee, during an inspection of records conducted by GSA as part of that agency's responsibility to recommend improvements in records management practices and programs, under authority of 44 U.S.C. 2904 and 2906. Such disclosure shall be made in accordance with the GSA regulations governing inspection of records for this purpose, and any other relevant (i.e., GSA or Commerce) directive. Such disclosure shall not be used to make determinations about individuals.

8. A record from this system of records may be disclosed, as a routine use, to the public after either publication of the application pursuant to 35 U.S.C. 122(b) or issuance of a patent pursuant to 35 U.S.C. 151. Further, a record may be disclosed, subject to the limitations of 37 CFR 1.14, as a routine use, to the public if the record was filed in an application which became abandoned or in which the proceedings were terminated and which application is referenced by either a published application, an application open to public inspections or an issued patent.

9. A record from this system of records may be disclosed, as a routine use, to a Federal, State, or local law enforcement agency, if the USPTO becomes aware of a violation or potential violation of law or regulation.

Electronic Patent Application Fee Transmittal

Application Number:	14651677
Filing Date:	12-Jun-2015
Title of Invention:	INSTRUMENT FOR DRILLING DENTAL ROOT CANALS
First Named Inventor/Applicant Name:	Gilbert ROTA
Filer:	Eric Jensen/Irene Sorto
Attorney Docket Number:	5001-1489

Filed as Large Entity

Filing Fees for U.S. National Stage under 35 USC 371

Description	Fee Code	Quantity	Amount	Sub-Total in USD($)
Basic Filing:				
Pages:				
Claims:				
Miscellaneous-Filing:				
Petition:				
Patent-Appeals-and-Interference:				
Post-Allowance-and-Post-Issuance:				
Extension-of-Time:				

Description	Fee Code	Quantity	Amount	Sub-Total in USD($)
Miscellaneous:				
RCE- 1st Request	1801	1	1200	1200
		Total in USD ($)		**1200**

Electronic Acknowledgement Receipt

EFS ID:	30178494
Application Number:	14651677
International Application Number:	
Confirmation Number:	4162
Title of Invention:	INSTRUMENT FOR DRILLING DENTAL ROOT CANALS
First Named Inventor/Applicant Name:	Gilbert ROTA
Customer Number:	466
Filer:	Eric Jensen/Irene Sorto
Filer Authorized By:	Eric Jensen
Attorney Docket Number:	5001-1489
Receipt Date:	25-AUG-2017
Filing Date:	12-JUN-2015
Time Stamp:	15:23:42
Application Type:	U.S. National Stage under 35 USC 371

Payment information:

Submitted with Payment	yes
Payment Type	CARD
Payment was successfully received in RAM	$1200
RAM confirmation Number	082817INTEFSW15250500
Deposit Account	250120
Authorized User	Irene Sorto

The Director of the USPTO is hereby authorized to charge indicated fees and credit any overpayment as follows:

37 CFR 1.17 (Patent application and reexamination processing fees)

37 CFR 1.19 (Document supply fees)

File Listing:

Document Number	Document Description	File Name	File Size(Bytes)/ Message Digest	Multi Part /.zip	Pages (if appl.)
1	Information Disclosure Statement (IDS) Form (SB08)	IDS_2017-08-25.pdf	1037082 ebde38cc02976e63561e5862ac421ac5d9f59dc4	no	8
Warnings:					
Information:					
A U.S. Publication Number Citation is required in the Information Disclosure Statement (IDS) form. You may remove the form to add the required data in order to correct the Informational Message or if you chose not to, the image of the form will be processed and be made available within the Image File Wrapper (IFW) system. However, no data will be extracted from this form. Any additional data such as Foreign Patent Documents or Non Patent Literature will be manually reviewed and keyed into USPTO systems.					
2	Foreign Reference	EP0120542A1.pdf	1064462 48947 67bb90ea4080f5485800b5e26ad209 67e02	no	15
Warnings:					
Information:					
3	Foreign Reference	EP0987076A2.pdf	608977 048b2aa9f9f672f280e3ef9606be8be0e94c4f2d	no	8
Warnings:					
Information:					
4	Foreign Reference	EP1184004A2.pdf	2687831 2392a59233b94dc6d5dfa9005e5c68e540da4a5a	no	29
Warnings:					
Information:					
5	Foreign Reference	EP1213074A2.pdf	790960 c25734b062df6b8024b96329337758 79febfaa65	no	8
Warnings:					
Information:					

6	Foreign Reference	EP1340573A1.pdf	1910882 02f09d872d47162666ab12352de88d7c2d4ecf42	no	19
Warnings:					
Information:					
7	Foreign Reference	FR2798277A1.pdf	672797 cd5d8d58c97dc3204637c70e47be9631a693d642	no	8
Warnings:					
Information:					
8	Foreign Reference	FR2854054A1.pdf	1968121 aa491455656fa0861ab98275587c2f8ff375f495	no	22
Warnings:					
Information:					
9	Foreign Reference	FR2935260A1.pdf	957176 1c23baf73088ba77922947ba058a487b2aff35b7	no	16
Warnings:					
Information:					
10	Foreign Reference	JP11019812.pdf	508398 3ee100b2112682b732fb131576b4402e222f7fed	no	7
Warnings:					
Information:					
11	Foreign Reference	JP52156494.pdf	340460 555f8f065e927c4fa2cbb4db66da0cd6976fc01b	no	3
Warnings:					
Information:					
12	Foreign Reference	JP57127608.pdf	540757 b3e7cda8874848149a00f372c4fb6552e56dae3c	no	6
Warnings:					
Information:					

13	Foreign Reference	JP62241606.pdf	389328 e39de050e1291da5ccbed1f6f8b27dd75e3e3ecd	no	4
Warnings:					
Information:					
14	Foreign Reference	JP2002144122A.pdf	635687 8d8786fbd3a692d1147227f3994d111181cca2689	no	8
Warnings:					
Information:					
15	Foreign Reference	JP2002205213A.pdf	1248264 548d300e770efec951d5d3c37c26e1a35c52d826	no	14
Warnings:					
Information:					
16	Foreign Reference	JP2009108382.pdf	1336007 90432e096c27814bc21b6ca69bef7c58cc0f011f	no	17
Warnings:					
Information:					
17	Foreign Reference	JPH06320323A.pdf	221902 bb326a5139a22cf5688b3b896311da39e9d4762b	no	5
Warnings:					
Information:					
18	Foreign Reference	JPWO2009001681A1.pdf	4171386 1b901cfba54978aca6b06dd650f5a66eb07f3f87	no	48
Warnings:					
Information:					
19	Foreign Reference	WO2014118587A1.pdf	692685 e28cbf012de58465d6cec3b2549f5930105 9adfa	no	20
Warnings:					
Information:					

20	Foreign Reference	SU637207A1.pdf	290783 e1a7f266823661da3a8d05516d266891135147d7	no	2
Warnings:					
Information:					
21	Foreign Reference	WO0119279A1.pdf	1348744 99ec262007acf1f8c05d49a3f83e089999931c6a5	no	12
Warnings:					
Information:					
22	Foreign Reference	WO02065938A1.pdf	2252509 edb301d8540cbea64773cb5cb9a08ca45ecd64d0	no	20
Warnings:					
Information:					
23	Foreign Reference	WO2004098438A1.pdf	2690550 cbe85e794cf7a0f3cb1202982d0946b25468dca0	no	57
Warnings:					
Information:					
24	Non Patent Literature	EP_OA.pdf	502907 f5b3fe37007ac3e1f961b4d121466c0c375f3fea	no	5
Warnings:					
Information:					
25	Non Patent Literature	EP_OA_2.pdf	267279 ee0c00dd6f8ab25308536fa3c82712b4c4b65c13	no	3
Warnings:					
Information:					
26	Non Patent Literature	EP_OA_3.pdf	408749 a0132a7b472de64e1391e26f1816f3e7900fcc88	no	5
Warnings:					
Information:					

27	Non Patent Literature	ISR_WO_NPL1.pdf	2138999 3502ca83c0b9df0f3bcdd75dec18ca0c1c78f42f	no	13
Warnings:					
Information:					
28	Non Patent Literature	ISR_WO_NPL2.pdf	2780609 e59f5712786b3d59a046f37a2e9310faf89d9476	no	15
Warnings:					
Information:					
29	Non Patent Literature	EP_OA_4.pdf	560841 00efd2167f3fa0e0dedaaa817a44187e209fb16c	no	7
Warnings:					
Information:					
30	Non Patent Literature	ProTaper_NPL.pdf	199904 15a1db20c746d169a9ca24fcd18f1bb1f16eafaf	no	1
Warnings:					
Information:					
31	Non Patent Literature	EP_SR.pdf	364430 f7fcee617bcf2fd74e951cc0774995569cf634d7	no	4
Warnings:					
Information:					
32	Non Patent Literature	Ultimate_Handyman_NPL.pdf	627416 12f0c4e21ef3f5ee3921772a997dab000da426db	no	3
Warnings:					
Information:					
33	Request for Continued Examination (RCE)	RCE.pdf	1350166 bf1264b06086b18cc077d2c02f048dd054634b88	no	3
Warnings:					
Information:					

34	Fee Worksheet (SB06)	fee-info.pdf	30165 fc1e0272ad081a37406d0a6139c5d1e3289de9dd	no	2

Warnings:

Information:

Total Files Size (in bytes):	37597213

This Acknowledgement Receipt evidences receipt on the noted date by the USPTO of the indicated documents, characterized by the applicant, and including page counts, where applicable. It serves as evidence of receipt similar to a Post Card, as described in MPEP 503.

New Applications Under 35 U.S.C. 111
If a new application is being filed and the application includes the necessary components for a filing date (see 37 CFR 1.53(b)-(d) and MPEP 506), a Filing Receipt (37 CFR 1.54) will be issued in due course and the date shown on this Acknowledgement Receipt will establish the filing date of the application.
National Stage of an International Application under 35 U.S.C. 371
If a timely submission to enter the national stage of an international application is compliant with the conditions of 35 U.S.C. 371 and other applicable requirements a Form PCT/DO/EO/903 indicating acceptance of the application as a national stage submission under 35 U.S.C. 371 will be issued in addition to the Filing Receipt, in due course.
New International Application Filed with the USPTO as a Receiving Office
If a new international application is being filed and the international application includes the necessary components for an international filing date (see PCT Article 11 and MPEP 1810), a Notification of the International Application Number and of the International Filing Date (Form PCT/RO/105) will be issued in due course, subject to prescriptions concerning national security, and the date shown on this Acknowledgement Receipt will establish the international filing date of the application.

PTO/SB/08a (03-15)
Approved for use through 07/31/2016. OMB 0651-0031
U.S. Patent and Trademark Office; U.S. DEPARTMENT OF COMMERCE

INFORMATION DISCLOSURE STATEMENT BY APPLICANT

(Not for submission under 37 CFR 1.99)

Application Number	14651677
Filing Date	2015-06-12
First Named Inventor	Gilbert ROTA
Art Unit	3766
Examiner Name	Eric D. BERTRAM
Attorney Docket Number	5001-1489

U.S.PATENTS Remove

Examiner Initial*	Cite No	Patent Number	Kind Code[1]	Issue Date	Name of Patentee or Applicant of cited Document	Pages,Columns,Lines where Relevant Passages or Relevant Figures Appear
	1	5921775	A	1999-07-13	BUCHANAN	cited in EP Office Action
	2	6106296	A	2000-08-22	JOHNSON	cited in EP Office Action
	3	5836764	A	1998-11-17	BUCHANAN	cited in EP Office Action
	4	5503554	A	1996-04-02	SCHOEFFEL	cited in EP Office Action
	5	5938440	A	1999-08-17	MCSPADDEN	cited in EP Office Action
	6	4842451	A	1989-06-27	DUGGER	cited in International Search Report
	7	6702579	B1	2004-03-09	HOPPE ET AL.	cited in EP Office Action
	8	5775904	A	1998-07-07	RIITANO	cited in European Search Report

If you wish to add additional U.S. Patent citation information please click the Add button. Add

INFORMATION DISCLOSURE STATEMENT BY APPLICANT (Not for submission under 37 CFR 1.99)		
	Application Number	14651677
	Filing Date	2015-06-12
	First Named Inventor	Gilbert ROTA
	Art Unit	3766
	Examiner Name	Eric D. BERTRAM
	Attorney Docket Number	5001-1489

U.S.PATENT APPLICATION PUBLICATIONS Remove

Examiner Initial*	Cite No	Publication Number	Kind Code[1]	Publication Date	Name of Patentee or Applicant of cited Document	Pages,Columns,Lines where Relevant Passages or Relevant Figures Appear
	1	20040219485	A1	2004-11-04	SCIANAMBLO	cited in EP Office Action
	2	20060228669	A1	2006-10-12	SCIANAMBLO	cited in International Search Report
	3	20120034048	A1	2012-02-09	KRIEG ET AL.	cited in International Search Report
	4	20040023186	A1	2007-01-18	MCSPADDEN	cited in International Search Report
	5	20070015107	A1	2007-01-18	MANNSCHEDEL ET AL.	cited in International Search Report
	6	20040219485	A1	2004-11-04	SCIANAMBLO	cited in EP Office Action
	7	20060111724	A1	2006-05-25	YEUNG	cited in International Search Report
	8					

If you wish to add additional U.S. Published Application citation information please click the Add button. Add

FOREIGN PATENT DOCUMENTS Remove

Examiner Initial*	Cite No	Foreign Document Number[3]	Country Code[2] i	Kind Code[4]	Publication Date	Name of Patentee or Applicant of cited Document	Pages,Columns,Lines where Relevant Passages or Relevant Figures Appear	T[5]

INFORMATION DISCLOSURE STATEMENT BY APPLICANT (Not for submission under 37 CFR 1.99)		
	Application Number	14651677
	Filing Date	2015-06-12
	First Named Inventor	Gilbert ROTA
	Art Unit	3766
	Examiner Name	Eric D. BERTRAM
	Attorney Docket Number	5001-1489

	1	0120542	EP	A1	1984-10-03		cited in EP OA; with English Abstract	
	2	0987076	EP	A2	2000-03-22		with English Abstract	
	3	1184004	EP	A2	2002-03-06			
	4	1213074	EP	A2	2002-06-12		with English Abstract	
	5	1340573	EP	A1	2003-09-03		with English Abstract	
	6	2798277	FR	A1	2001-03-16		with English Abstract	
	7	2854054	FR	A1	2004-10-29		with English Abstract	
	8	2935260	FR	A1	2010-03-05		with English Abstract	
	9	11-019812	JP	A	1999-01-26		with Computer Generated English Translation	
	10	52-156494	JP	A	1977-12-26		with English Abstract	
	11	57-127608	JP	A	1982-08-07		with English Abstract	

INFORMATION DISCLOSURE STATEMENT BY APPLICANT (Not for submission under 37 CFR 1.99)	Application Number	14651677
	Filing Date	2015-06-12
	First Named Inventor	Gilbert ROTA
	Art Unit	3766
	Examiner Name	Eric D. BERTRAM
	Attorney Docket Number	5001-1489

	12	62-241606	JP	A	1987-10-22		with English Abstract	
	13	2002-144122	JP	A	2002-05-21		with English Abstract	
	14	2002-205213	JP	A	2002-07-23		with English Abstract	
	15	2009-108382	JP	A	2009-05-21		with Computer Generated English Translation	
	16	H06-320323	JP	A	1994-11-22		with English Abstract	
	17	WO2009001681	JP	A1	2010-08-26		with English Abstract	
	18	2014/118587	WO	A1	2014-08-07		cited in European Search Report	
	19	637207	SU	A1	1978-12-15			
	20	01/19279	WO	A1	2001-03-22		with English Abstract	
	21	02/065938	WO	A1	2002-08-29		with English Abstract	
	22	2004/098438	WO	A1	2004-11-18			

INFORMATION DISCLOSURE STATEMENT BY APPLICANT (Not for submission under 37 CFR 1.99)		
	Application Number	14651677
	Filing Date	2015-06-12
	First Named Inventor	Gilbert ROTA
	Art Unit	3766
	Examiner Name	Eric D. BERTRAM
	Attorney Docket Number	5001-1489

If you wish to add additional Foreign Patent Document citation information please click the Add button Add

NON-PATENT LITERATURE DOCUMENTS Remove

Examiner Initials*	Cite No	Include name of the author (in CAPITAL LETTERS), title of the article (when appropriate), title of the item (book, magazine, journal, serial, symposium, catalog, etc), date, pages(s), volume-issue number(s), publisher, city and/or country where published.	T[5]
	1	European Office Action issued in Application No. 06007527.2, dated June 17, 2009	
	2	European Office Action issued in Application No. 04750878.3, dated June 5, 2007	
	3	European Office Action issued in Application No. 04751290.0, dated June 5, 2007	
	4	International Search Report and Written Opinion issued in Application No. PCT/US2014/051916, dated February 4, 2015	
	5	International Search Report and Written Opinion issued in Application No. PCT/US2014/051909, dated December 22, 2014	
	6	European Office Action issued in Application No. 06007527.2, dated July 6, 2004	
	7	"ProTaper Next: A Shift Up In Performance," ProTaper Next Rotary Files, January 2013, 1 pages	
	8	European Search Report issued in Application No. 14838210.4, dated March 8, 2014	
	9	"Drilling Through Walls," Ultimate Handyman, YouTube, <URL: https://www.youtube.com/watch?v=fpFUxlcH2Lg>, September 23, 2011, retrieved from the internet August 24, 2017, 3 pages	

If you wish to add additional non-patent literature document citation information please click the Add button Add

INFORMATION DISCLOSURE STATEMENT BY APPLICANT (Not for submission under 37 CFR 1.99)		
	Application Number	14651677
	Filing Date	2015-06-12
	First Named Inventor	Gilbert ROTA
	Art Unit	3766
	Examiner Name	Eric D. BERTRAM
	Attorney Docket Number	5001-1489

EXAMINER SIGNATURE			
Examiner Signature		Date Considered	

*EXAMINER: Initial if reference considered, whether or not citation is in conformance with MPEP 609. Draw line through a citation if not in conformance and not considered. Include copy of this form with next communication to applicant.

[1] See Kind Codes of USPTO Patent Documents at www.USPTO.GOV or MPEP 901.04. [2] Enter office that issued the document, by the two-letter code (WIPO Standard ST.3). [3] For Japanese patent documents, the indication of the year of the reign of the Emperor must precede the serial number of the patent document. [4] Kind of document by the appropriate symbols as indicated on the document under WIPO Standard ST.16 if possible. [5] Applicant is to place a check mark here if English language translation is attached.

INFORMATION DISCLOSURE STATEMENT BY APPLICANT (Not for submission under 37 CFR 1.99)		
	Application Number	14651677
	Filing Date	2015-06-12
	First Named Inventor	Gilbert ROTA
	Art Unit	3766
	Examiner Name	Eric D. BERTRAM
	Attorney Docket Number	5001-1489

CERTIFICATION STATEMENT

Please see 37 CFR 1.97 and 1.98 to make the appropriate selection(s):

That each item of information contained in the information disclosure statement was first cited in any communication from a foreign patent office in a counterpart foreign application not more than three months prior to the filing of the information disclosure statement. See 37 CFR 1.97(e)(1).

OR

☐ That no item of information contained in the information disclosure statement was cited in a communication from a foreign patent office in a counterpart foreign application, and, to the knowledge of the person signing the certification after making reasonable inquiry, no item of information contained in the information disclosure statement was known to any individual designated in 37 CFR 1.56(c) more than three months prior to the filing of the information disclosure statement. See 37 CFR 1.97(e)(2).

See attached certification statement.

The fee set forth in 37 CFR 1.17 (p) has been submitted herewith.

☒ A certification statement is not submitted herewith.

SIGNATURE

A signature of the applicant or representative is required in accordance with CFR 1.33, 10.18. Please see CFR 1.4(d) for the form of the signature.

Signature	/Eric Jensen/	Date (YYYY-MM-DD)	2017-08-25
Name/Print	Eric Jensen	Registration Number	37855

This collection of information is required by 37 CFR 1.97 and 1.98. The information is required to obtain or retain a benefit by the public which is to file (and by the USPTO to process) an application. Confidentiality is governed by 35 U.S.C. 122 and 37 CFR 1.14. This collection is estimated to take 1 hour to complete, including gathering, preparing and submitting the completed application form to the USPTO. Time will vary depending upon the individual case. Any comments on the amount of time you require to complete this form and/or suggestions for reducing this burden, should be sent to the Chief Information Officer, U.S. Patent and Trademark Office, U.S. Department of Commerce, P.O. Box 1450, Alexandria, VA 22313-1450. DO NOT SEND FEES OR COMPLETED FORMS TO THIS ADDRESS. **SEND TO: Commissioner for Patents, P.O. Box 1450, Alexandria, VA 22313-1450.**

Privacy Act Statement

The Privacy Act of 1974 (P.L. 93-579) requires that you be given certain information in connection with your submission of the attached form related to a patent application or patent. Accordingly, pursuant to the requirements of the Act, please be advised that: (1) the general authority for the collection of this information is 35 U.S.C. 2(b)(2); (2) furnishing of the information solicited is voluntary; and (3) the principal purpose for which the information is used by the U.S. Patent and Trademark Office is to process and/or examine your submission related to a patent application or patent. If you do not furnish the requested information, the U.S. Patent and Trademark Office may not be able to process and/or examine your submission, which may result in termination of proceedings or abandonment of the application or expiration of the patent.

The information provided by you in this form will be subject to the following routine uses:

1. The information on this form will be treated confidentially to the extent allowed under the Freedom of Information Act (5 U.S.C. 552) and the Privacy Act (5 U.S.C. 552a). Records from this system of records may be disclosed to the Department of Justice to determine whether the Freedom of Information Act requires disclosure of these record s.

2. A record from this system of records may be disclosed, as a routine use, in the course of presenting evidence to a court, magistrate, or administrative tribunal, including disclosures to opposing counsel in the course of settlement negotiations.

3. A record in this system of records may be disclosed, as a routine use, to a Member of Congress submitting a request involving an individual, to whom the record pertains, when the individual has requested assistance from the Member with respect to the subject matter of the record.

4. A record in this system of records may be disclosed, as a routine use, to a contractor of the Agency having need for the information in order to perform a contract. Recipients of information shall be required to comply with the requirements of the Privacy Act of 1974, as amended, pursuant to 5 U.S.C. 552a(m).

5. A record related to an International Application filed under the Patent Cooperation Treaty in this system of records may be disclosed, as a routine use, to the International Bureau of the World Intellectual Property Organization, pursuant to the Patent Cooperation Treaty.

6. A record in this system of records may be disclosed, as a routine use, to another federal agency for purposes of National Security review (35 U.S.C. 181) and for review pursuant to the Atomic Energy Act (42 U.S.C. 218(c)).

7. A record from this system of records may be disclosed, as a routine use, to the Administrator, General Services, or his/her designee, during an inspection of records conducted by GSA as part of that agency's responsibility to recommend improvements in records management practices and programs, under authority of 44 U.S.C. 2904 and 2906. Such disclosure shall be made in accordance with the GSA regulations governing inspection of records for this purpose, and any other relevant (i.e., GSA or Commerce) directive. Such disclosure shall not be used to make determinations about individuals.

8. A record from this system of records may be disclosed, as a routine use, to the public after either publication of the application pursuant to 35 U.S.C. 122(b) or issuance of a patent pursuant to 35 U.S.C. 151. Further, a record may be disclosed, subject to the limitations of 37 CFR 1.14, as a routine use, to the public if the record was filed in an application which became abandoned or in which the proceedings were terminated and which application is referenced by either a published application, an application open to public inspections or an issued patent.

9. A record from this system of records may be disclosed, as a routine use, to a Federal, State, or local law enforcement agency, if the USPTO becomes aware of a violation or potential violation of law or regulation.

PATENT COOPERATION TREATY

PCT

INTERNATIONAL SEARCH REPORT

(PCT Article 18 and Rules 43 and 44)

Applicant's or agent's file reference 155130008WO1	**FOR FURTHER ACTION**	see Form PCT/ISA/220 as well as, where applicable, item 5 below.
International application No. PCT/US2014/051916	International filing date *(day/month/year)* 20 August 2014	(Earliest) Priority Date *(day/month/year)* 21 August 2013
Applicant SCIANAMBLO, MICHAEL J.		

This international search report has been prepared by this International Searching Authority and is transmitted to the applicant according to Article 18. A copy is being transmitted to the International Bureau.

This international search report consists of a total of 4 sheets.

☐ It is also accompanied by a copy of each prior art document cited in this report.

1. **Basis of the report**
   a. With regard to the **language**, the international search was carried out on the basis of:
      ☒ the international application in the language in which it was filed.
      ☐ a translation of the international application into _____ which is the language of a translation furnished for the purposes of international search (Rules 12.3(a) and 23.1(b)).
   b. ☐ This international search report has been established taking into account the **rectification of an obvious mistake** authorized by or notified to this Authority under Rule 91 (Rule 43.6*bis*(a)).
   c. ☐ With regard to any **nucleotide and/or amino acid sequence** disclosed in the international application, see Box No. I.
2. ☒ **Certain claims were found unsearchable** (see Box No. II).
3. ☒ **Unity of invention is lacking** (see Box No. III).
4. With regard to the **title**,
   ☒ the text is approved as submitted by the applicant.
   ☐ the text has been established by this Authority to read as follows:
5. With regard to the **abstract**,
   ☒ the text is approved as submitted by the applicant.
   ☐ the text has been established, according to Rule 38.2, by this Authority as it appears in Box No. IV. The applicant may, within one month from the date of mailing of this international search report, submit comments to this Authority.
6. With regard to the **drawings**,
   a. the figure of the **drawings** to be published with the abstract is Figure No. 8D
      ☒ as suggested by the applicant.
      ☐ as selected by this Authority, because the applicant failed to suggest a figure.
      ☐ as selected by this Authority, because this figure better characterizes the invention.
   b. ☐ none of the figures is to be published with the abstract.

INTERNATIONAL SEARCH REPORT

International application No.
PCT/US2014/051916

Box No. II **Observations where certain claims were found unsearchable (Continuation of item 2 of first sheet)**

This international search report has not been established in respect of certain claims under Article 17(2)(a) for the following reasons:

1. ☐ Claims Nos.:
because they relate to subject matter not required to be searched by this Authority, namely:

2. ☐ Claims Nos.:
because they relate to parts of the international application that do not comply with the prescribed requirements to such an extent that no meaningful international search can be carried out, specifically:

3. ☒ Claims Nos.: 4-16, 18, 21-25
because they are dependent claims and are not drafted in accordance with the second and third sentences of Rule 6 4(a).

Box No. III **Observations where unity of invention is lacking (Continuation of item 3 of first sheet)**

This International Searching Authority found multiple inventions in this international application, as follows:
see extra sheet

1. ☐ As all required additional search fees were timely paid by the applicant, this international search report covers all searchable claims.

2. ☐ As all searchable claims could be searched without effort justifying additional fees, this Authority did not invite payment of additional fees.

3. ☐ As only some of the required additional search fees were timely paid by the applicant, this international search report covers only those claims for which fees were paid, specifically claims Nos.:

4. ☒ No required additional search fees were timely paid by the applicant. Consequently, this international search report is restricted to the invention first mentioned in the claims; it is covered by claims Nos.:
1-3, 17, 19, 20, 26-33, 43-61

Remark on Protest

☐ The additional search fees were accompanied by the applicant's protest and, where applicable, the payment of a protest fee.

☐ The additional search fees were accompanied by the applicant's protest but the applicable protest fee was not paid within the time limit specified in the invitation.

☐ No protest accompanied the payment of additional search fees.

INTERNATIONAL SEARCH REPORT

International application No.
PCT/US2014/051916

A. CLASSIFICATION OF SUBJECT MATTER
IPC(8) - A61B 17/16 (2015.01)
CPC - A61B 17/1615, 17/164 (2015.01)
According to International Patent Classification (IPC) or to both national classification and IPC

B. FIELDS SEARCHED

Minimum documentation searched (classification system followed by classification symbols)
IPC(8) - A61B 17/16, 17/17; B23B 51/00, 51/02 (2015.01)
CPC - A61B 17/16, 17/1615, 17/164, 17/1662, 17/1664, 17/1668, 17/17; A61C 8/0089; B23B 51/00, 51/02, 2251/18 (2015.01)

Documentation searched other than minimum documentation to the extent that such documents are included in the fields searched
USPC - 408/127, 211, 225; 433/102; 606/80, 86, 96 (keyword delimited)

Electronic data base consulted during the international search (name of data base and, where practicable, search terms used)

Orbit, Google Patents, Google Scholar.
Search terms used: bone, drill, bit, borer, rotary tool, boring tool, offset, center of mass, centroid, intramedullary, self-tapping, shank

C. DOCUMENTS CONSIDERED TO BE RELEVANT

Category*	Citation of document, with indication, where appropriate, of the relevant passages	Relevant to claim No.
X	US 2006/0228669 A1 (SCIANAMBLO) 12 October 2006 (12.10.2006) entire document	1-3,17,19-20,26-33,43-61
A	US 4,842,451 A (DUGGER) 27 June 1989 (27.06.1989) entire document	1-3,17,19-20,26-33,43-61
A	US 2006/0228668 A1 (MCSPADDEN) 12 October 2006 (12.10.2006) entire document	1-3,17,19-20,26-33,43-61

☐ Further documents are listed in the continuation of Box C. ☐

* Special categories of cited documents:
"A" document defining the general state of the art which is not considered to be of particular relevance
"E" earlier application or patent but published on or after the international filing date
"L" document which may throw doubts on priority claim(s) or which is cited to establish the publication date of another citation or other special reason (as specified)
"O" document referring to an oral disclosure, use, exhibition or other means
"P" document published prior to the international filing date but later than the priority date claimed
"T" later document published after the international filing date or priority date and not in conflict with the application but cited to understand the principle or theory underlying the invention
"X" document of particular relevance; the claimed invention cannot be considered novel or cannot be considered to involve an inventive step when the document is taken alone
"Y" document of particular relevance; the claimed invention cannot be considered to involve an inventive step when the document is combined with one or more other such documents, such combination being obvious to a person skilled in the art
"&" document member of the same patent family

Date of the actual completion of the international search
20 January 2015

Date of mailing of the international search report
04 FEB 2015

Name and mailing address of the ISA/US
Mail Stop PCT, Attn: ISA/US, Commissioner for Patents
P.O. Box 1450, Alexandria, Virginia 22313-1450
Facsimile No. 571-273-3201

Authorized officer:
Blaine R. Copenheaver
PCT Helpdesk: 571-272-4300
PCT OSP: 571-272-7774

Form PCT/ISA/210 (second sheet) (July 2009)

This application contains the following inventions or groups of inventions which are not so linked as to form a single general inventive concept under PCT Rule 13.1. In order for all inventions to be examined, the appropriate additional examination fees need to be paid.

Group I, claims 1-3, 17, 19, 20, 26-33, 43-61 are drawn to a bone drill comprising a shank.
Group II, claims 34-42 are drawn to an apparatus for harvesting bone matter comprising a first canister comprising an open cylinder.

The inventions listed in Groups I, II do not relate to a single general inventive concept under PCT Rule 13.1, because under PCT Rule 13.2 they lack the same or corresponding special technical features for the following reasons:

The special technical features of Group I, a bone drill comprising: a shank configured to be releasably attachable to a motor to rotate the bone drill about an axis of rotation; and a drill body extending from the shank, the drill body including a shank end where the drill body extends from the shank and a free end at an end of the drill body that is opposite of the shank end, the drill body including a cutting portion between the shank end and the free end, the drill body having a center of mass at each transverse cross-section of the drill body, wherein a center of mass of a transverse cross-section at the shank end is offset from the axis of rotation and a center of mass of a transverse cross-section at the free end lies on or near the axis of rotation are not present in Group II; the special technical features of Group II, an apparatus for harvesting bone matter, the apparatus comprising: a first canister, the first canister comprising an open cylinder with an inner diameter and an outer diameter, the open cylinder of the first canister including a proximal end and a distal end, the proximal end being configured to couple with a bone drill; and a second canister, the second canister comprising an open cylinder with an inner diameter and an outer diameter, the open cylinder of the second canister including a proximal end and a distal end, wherein the first canister and the second canister are configured to slidably engage with each other such that, in a retracted configuration, a majority of one of the canisters is positioned substantially within an interior region defined by the other canister, and wherein, in an extended configuration, a majority of each of the canisters is positioned outside of the interior region defined by the other canister are not present in Group I.

Groups I and II share the technical feature of a bone drill. However, this shared technical feature does not represent a contribution over the prior art. Specifically US 4,007,528 A to Shea et al disclose a bone drill (title, abstract; Fig. 1 bone drill 2).

Since none of the special technical features of the Groups I II inventions are found in more than one of the inventions, unity is lacking.

PATENT COOPERATION TREATY

From the
INTERNATIONAL SEARCHING AUTHORITY

To: PAUL WESTERN
FISH & RICHARDSON P.C.
P. O. BOX 1022
MINNEAPOLIS, MN 55440-1022

PCT

WRITTEN OPINION OF THE
INTERNATIONAL SEARCHING AUTHORITY

(PCT Rule 43*bis*.1)

Date of mailing (*day/month/year*) 04 FEB 2015

Applicant's or agent's file reference	FOR FURTHER ACTION
155130008WO1	See paragraph 2 below

International application No.	International filing date (*day/month/year*)	Priority date (*day/month/year*)
PCT/US2014/051916	20 August 2014	21 August 2013

International Patent Classification (IPC) or both national classification and IPC
IPC(8) - A61B 17/16 (2015.01)
CPC - A61B 17/1615, 17/164 (2015.01)

Applicant SCIANAMBLO, MICHAEL J.

1. This opinion contains indications relating to the following items:

- [x] Box No. I Basis of the opinion
- [ ] Box No. II Priority
- [x] Box No. III Non-establishment of opinion with regard to novelty, inventive step and industrial applicability
- [x] Box No. IV Lack of unity of invention
- [x] Box No. V Reasoned statement under Rule 43*bis*.1(a)(i) with regard to novelty, inventive step or industrial applicability; citations and explanations supporting such statement
- [ ] Box No. VI Certain documents cited
- [ ] Box No. VII Certain defects in the international application
- [ ] Box No. VIII Certain observations on the international application

2. **FURTHER ACTION**

If a demand for international preliminary examination is made, this opinion will be considered to be a written opinion of the International Preliminary Examining Authority ("IPEA") except that this does not apply where the applicant chooses an Authority other than this one to be the IPEA and the chosen IPEA has notified the International Bureau under Rule 66.1 *bis*(b) that written opinions of this International Searching Authority will not be so considered.

If this opinion is, as provided above, considered to be a written opinion of the IPEA, the applicant is invited to submit to the IPEA a written reply together, where appropriate, with amendments, before the expiration of 3 months from the date of mailing of Form PCT/ISA/220 or before the expiration of 22 months from the priority date, whichever expires later.

For further options, see Form PCT/ISA/220.

Name and mailing address of the ISA/US	Date of completion of this opinion	Authorized officer:
Mail Stop PCT, Attn: ISA/US Commissioner for Patents P.O. Box 1450, Alexandria, Virginia 22313-1450 Facsimile No. 571-273-3201	20 January 2015	Blaine R. Copenheaver PCT Helpdesk: 571-272-4300 PCT OSP: 571-272-7774

Form PCT/ISA/237 (cover sheet) (July 2011)

WRITTEN OPINION OF THE INTERNATIONAL SEARCHING AUTHORITY

International application No.
PCT/US2014/051916

Box No. I Basis of this opinion

1. With regard to the **language**, this opinion has been established on the basis of:

   ☒ the international application in the language in which it was filed.

   ☐ a translation of the international application into _____ which is the language of a translation furnished for the purposes of international search (Rules 12.3(a) and 23.1(b)).

2. ☐ This opinion has been established taking into account the **rectification of an obvious mistake** authorized by or notified to this Authority under Rule 91 (Rule 43*bis*.1(a))

3. With regard to any **nucleotide and/or amino acid sequence** disclosed in the international application, this opinion has been established on the basis of a sequence listing filed or furnished:

   a. (means)

   ☐ on paper

   ☐ in electronic form

   b. (time)

   ☐ in the international application as filed

   ☐ together with the international application in electronic form

   ☐ subsequently to this Authority for the purposes of search

4. ☐ In addition, in the case that more than one version or copy of a sequence listing has been filed or furnished, the required statements that the information in the subsequent or additional copies is identical to that in the application as filed or does not go beyond the application as filed, as appropriate, were furnished.

5. Additional comments:

WRITTEN OPINION OF THE INTERNATIONAL SEARCHING AUTHORITY

International application No.
PCT/US2014/051916

Box No. III Non-establishment of opinion with regard to novelty, inventive step and industrial applicability

The questions whether the claimed invention appears to be novel, to involve an inventive step (to be non obvious), or to be industrially applicable have not been examined in respect of:

☐ the entire international application.

☒ claims Nos. 4-16, 18, 21-25

because:

☐ the said international application, or the said claims Nos. _____ relate to the following subject matter which does not require an international search *(specify)*:

☒ the description, claims or drawings *(indicate particular elements below)* or said claims Nos. 4-16, 18, 21-25 are so unclear that no meaningful opinion could be formed *(specify)*:

Claims 4-16, 18, 21-25 are improper multidependent claims not drafted in accordance with the second and third sentences of Rule 6.4 (a).

☐ the claims, or said claims Nos. _____ are so inadequately supported by the description that no meaningful opinion could be formed *(specify)*:

☒ no international search report has been established for said claims Nos. 4-16, 18, 21-25

☐ a meaningful opinion could not be formed without the sequence listing, the applicant did not, within the prescribed time limit

☐ furnish a sequence listing on paper complying with the standard provided for in Annex C of the Administrative Instructions, and such listing was not available to the International Searching Authority in a form and mannarceptable to it.

☐ furnish a sequence listing in electronic form complying with the standard provided for in Annex C of the Administrative Instructions, and such listing was not available to the International Searching Authority in a form and mannarceptable to it.

☐ pay the required late furnishing fee for the furnishing of a sequence listing in response to an invitation under Rule 13*ter*.1(a) or (b).

☐ See Supplemental Box for further details.

WRITTEN OPINION OF THE INTERNATIONAL SEARCHING AUTHORITY

International application No.
PCT/US2014/051916

Box No. IV Lack of unity of invention

1. ☒ In response to the invitation (Form PCT/ISA/206) to pay additional fees the applicant has, within the appicable time limit:

   ☐ paid additional fees

   ☐ paid additional fees under protest and, where applicable, the protest fee

   ☐ paid additional fees under protest but the applicable protest fee was not paid

   ☒ not paid additional fees

2. ☐ This Authority found that the requirement of unity of invention is not complied with and chose not to invite the applicant to pay additional fees.

3. This Authority considers that the requirement of unity of invention in accordance with Rule 13.1, 13.2 and 13.3 is

   ☐ complied with

   ☒ not complied with for the following reasons:

This application contains the following inventions or groups of inventions which are not so linked as to form a single general inventive concept under PCT Rule 13.1. In order for all inventions to be examined, the appropriate additional examination fees need to be paid.

Group I, claims 1-3, 17, 19, 20, 26-33, 43-61 are drawn to a bone drill comprising a shank.
Group II, claims 34-42 are drawn to an apparatus for harvesting bone matter comprising a first canister comprising an open cylinder.

The inventions listed in Groups I, II do not relate to a single general inventive concept under PCT Rule 13.1, because under PCT Rule 13.2 they lack the same or corresponding special technical features for the following reasons:

The special technical features of Group I, a bone drill comprising: a shank configured to be releasably attachable to a motor to rotate the bone drill about an axis of rotation; and a drill body extending from the shank, the drill body including a shank end where the drill body extends from the shank and a free end at an end of the drill body that is opposite of the shank end, the drill body including a cutting portion between the shank end and the free end, the drill body having a center of mass at each transverse cross-section of the drill body, wherein a center of mass of a transverse cross-section at the shank end is offset from the axis of rotation and a center of mass of a transverse cross-section at the free end lies on or near the axis of rotation are not present in Group II; the special technical features of Group II, an apparatus for harvesting bone matter, the apparatus comprising: a first canister, the first canister comprising an open cylinder with an inner diameter and an outer diameter, the open cylinder of the first canister including a proximal end and a distal end, the proximal end being configured to couple with a bone drill; and a second canister, the second canister comprising an open cylinder with an inner diameter and an outer diameter, the open cylinder of the second canister including a proximal end and a distal end, wherein the first canister and the second canister are configured to slidably engage with each other such that, in a retracted configuration, a majority of one of the canisters is positioned substantially within an interior region defined by the other canister, and wherein, in an extended configuration, a majority of each of the canisters is positioned outside of the interior region defined by the other canister are not present in Group I.

Groups I and II share the technical feature of a bone drill. However, this shared technical feature does not represent a contribution over the prior art. Specifically US 4,007,528 A to Shea et al disclose a bone drill (title, abstract; Fig. 1 bone drill 2).

Since none of the special technical features of the Groups I II inventions are found in more than one of the inventions, unity is lacking.

4. Consequently, this opinion has been established in respect of the following parts of the international application:

   ☐ all parts

   ☒ the parts relating to claims Nos. 1-3, 17, 19, 20, 26-33, 43-61

WRITTEN OPINION OF THE INTERNATIONAL SEARCHING AUTHORITY

International application No.

PCT/US2014/051916

Box No. V **Reasoned statement under Rule 43*bis*.1(a)(i) with regard to novelty, inventive step or industrial applicability; citations and explanations supporting such statement**

1. Statement

Novelty (N)	Claims	17,19-20,26-33,45-46,48-49,50-53,55,57-58,60-61	YES
	Claims	1-3,43,47,54,56,59	NO
Inventive step (IS)	Claims	None	YES
	Claims	1-3,17,19-20,26-33,43-61	NO
Industrial applicability (IA)	Claims	1-3,17,19-20,26-33,43-61	YES
	Claims	None	NO

2. Citations and explanations:

Claims 1-3, 43-44, 47, 54, 56, and 59 lack novelty under PCT Article 33(2) as being anticipated by Scianamblo.
Regarding claim 1, Scianamblo discloses a bone drill (swaggering instrument 2410; Fig. 31A; para [0235]), comprising:
a shank (near 2410 in Fig. 31A) configured to be releasably attachable to a motor to rotate the bone drill about an axis of rotation (para [0235]); and
a drill body (where 2420 is shown in Fig. 31A) extending from the shank, the drill body including a shank end where the drill body extends from the shank and a free end at an end of the drill body that is opposite of the shank end, the drill body including a cutting portion between the shank end and the free end (see claim 18), the drill body having a center of mass (centroid) at each transverse cross-section of the drill body, wherein a center of mass of a transverse cross-section at the shank end is offset from the axis of rotation and a center of mass of a transverse cross-section at the free end lies on or near the axis of rotation (see claim 18; Fig. 31A).

Regarding claim 2, Scianamblo discloses the bone drill of claim 1, wherein the distance of the center of mass from the axis of rotation decreases linearly from the shank end to the free end (see Fig. 31A).

Regarding claim 3, Scianamblo discloses the bone drill of claim 1, wherein the center of mass of the transverse cross-section at the free end lies on the axis of rotation (see Fig. 31A).

Regarding claim 43, Scianamblo discloses a bone drill (swaggering instrument 2410; Fig. 31A; para [0235]), comprising:
a shank (near 2410 shown in Fig. 31A) configured to be releasably attachable to a motor to rotate the bone drill about an axis of rotation (para [0235]); and
a drill body (where 2420 is shown in Fig. 31A) extending from the shank, the drill body including a shank end where the drill body extends from the shank and a free end at an end of the drill body that is opposite of the shank end, the drill body including a cutting portion between the shank end and the free end (see claim 18; Fig 31A), the drill body having a center of mass (centroid) at each transverse cross-section of the drill body, wherein a center of mass of a transverse cross-section at the shank end is offset from the axis of rotation and a center of mass of a transverse cross-section at the free end is offset from the axis of rotation (see claim 18), and wherein a distance from a center of mass of each transverse cross-section between the shank end and the free end is offset from the axis of rotation by a substantially consistent distance (see Fig. 31A)

Regarding claim 44, Scianamblo discloses the bone drill of claim 43, wherein the centers of mass of consecutive transverse cross-sections between the shank end and the free end form a mass path, and wherein the mass path comprises a helix ("helical waves"; para [0235]).

Regarding claim 47, Scianamblo discloses the bone drill of claim 43, wherein the drill body (where 2420 is shown in Fig. 31A) is tapered from the shank end to the free end such that the shank end has a larger cutting diameter than the free end (Fig. 31A).

Regarding claim 54, Scianamblo discloses a bone drill (instrument 2201; Figs. 29-29C), comprising:
a shank (near 2216 in Figs. 29D) configured to be releasably attachable to a motor to rotate the bone drill about an axis of rotation (axis of rotation 2216); and
a drill body (2222 shown in Fig. 29) extending from the shank, the drill body including a shank end where the drill body extends from the shank and a free end at an end of the drill body that is opposite of the shank end, the drill body including a cutting portion between the shank end and the free end, the drill body having a center of mass (centroid 2210; para [0231]) at each transverse cross-section of the drill body, wherein a center of mass of a transverse cross-section at the shank end is offset from the axis of rotation and a center of mass of a transverse cross-section at the free end is offset from the axis of rotation (Figs. 29-29D); para [0231]).

Regarding claim 56, Scianamblo discloses the bone drill of claim 54, wherein the centers of mass of consecutive transverse cross-sections between the shank end and the free end form a mass path, and wherein at least a portion of the mass path is substantially linear. Specifically, Scianamblo discloses the "instrument can have a linear section" (para [0231]) (see Figs. 29 and 29D).

Supplemental Box

In case the space in any of the preceding boxes is not sufficient.
Continuation of:

Regarding claim 59, Scianamblo discloses the bone drill of claim 54, wherein the centers of mass (centroids 2210) of consecutive transverse cross-sections between the shank end and the free end form a mass path, wherein at least a portion of the mass path is curved, and wherein a center of mass (centroids 2210) of two or more transverse cross-sections are on the center of rotation (see Fig. 29C; para [0231]).

Claims 17, 19-20, 26-33, 45-46, 48-53, 55, 57-58, and 60-61 lack an inventive step under PCT Article 33(3) as being obvious over Scianamblo.
Regarding claim 17, Scianamblo discloses the bone drill of claim 1 but, lacks the teaching wherein a portion of the drill body near the free end has blunted cutting edges. However, in an alternate embodiment shown in Fig. 23A, Scianamblo teaches a portion of the drill body (tip 1213; Fig. 23A) near the free end has blunted cutting edges (para [0210]). It would have been obvious to one of ordinary skill in the art at the time of the invention to modify the bone drill of Scianamblo to include a portion of the drill body near the free end having blunted cutting edges, as taught in the alternate embodiment, for the purpose of enhancing the precision of the bone drill.

Regarding claim 19, Scianamblo discloses the bone drill of claim 1 but, lacks the further teaching wherein the cutting portion is sized to prepare an osteotomy having a diameter within a range of about 1.5 millimeters to about 8.0 millimeters. It would have been obvious to one of ordinary skill in the art at the time of the invention to modify the bone drill of Scianamblo to include the cutting portion is sized to prepare an osteotomy having a diameter within a range of about 1.5 millimeters to about 8.0 millimeters, since where the general conditions of the claim are discloses in the prior art, discovering the optimum or workable ranges involves only routine skill in the art. The motivation for doing so would be to provide a bone drill that may be used for preparing a variety of bone or cavity spaces.

Regarding claim 20, Scianamblo discloses the bone drill of claim 1 but, lacks the teaching wherein the bone drill is sized to prepare an osteotomy having a depth sufficient to receive dental implants with lengths ranging from about 8 millimeters to about 18 millimeters. Scianamblo teaches the bone drill is sized to prepare endodontic cavity spaces (para [0017]). It would have been obvious to one of ordinary skill in the art at the time of the invention to modify the bone drill of Scianamblo to include the bone drill is sized to prepare an osteotomy having a depth sufficient to receive dental implants with lengths ranging from about 8 millimeters to about 18 millimeters, since where the general conditions of the claim are discloses in the prior art, discovering the optimum or workable ranges involves only routine skill in the art. The motivation for doing so would be to provide a bone drill that may be used for preparing a variety of bone or cavity spaces.

Regarding claim 26, Scianamblo discloses a method of cleaning or enlarging an endodontic space ("a method of cleaning an endodontic cavity space"; claim 41; para [0025]), the method comprising:
inserting the bone drill of claim 1 into the endodontic cavity (claim 41; para [0025]);
contacting the tip end of the bone drill against an inner surface of the cavity space (claim 41; para [0025]); and
rotating the bone drill so that the tapered body bends away from the axis of rotation a substantially equal amount at a first angle of rotation and at a second angle of rotation (claim 41; para [0025]).
However, Scianamblo fails to disclose a method of cleaning an intramedullary space. It would have been obvious to one of ordinary skill in the art at the time of the invention to modify the method of Scianamblo to include a method of cleaning an intramedullary space, since it is well known in the art that the endodontic space is a bone cavity space and a method of preparing any bone cavity space can be used in preparing another bone cavity space. The motivation for doing so would be to provide a method of cleaning bone that is versatile for use with a variety of patients.

Regarding claim 27, Scianamblo teaches the method of claim 26 but, wherein rotating the bone drill includes causing the bone drill to form sinusoidal waves within the cavity space (see claim 42; para [0025]). However, Scianamblo fails to disclose causing the bone drill to form sinusoidal waves in the intramedullary space. It would have been obvious to one of ordinary skill in the art at the time of the invention to modify the method of Scianamblo to include the bone drill forming sinusoidal waves in an intramedullary space, since it is well known in the art that the endodontic space is a bone cavity space and a method of preparing any bone cavity space can be used in preparing another bone cavity space. The motivation for doing so would be to provide a method of cleaning bone that is versatile for use with a variety of patients.

Regarding claim 28, Scianamblo teaches the method of claim 26 but, lacks the further teaching wherein rotating the bone drill includes causing the bone drill to form helical waves within the intramedullary space. In an alternate embodiment, shown in Fig. 31A, Scianamblo teaches wherein rotating the bone drill includes causing the bone drill to form helical waves within the endodontic cavity space (see claim 17; para [0021], [0024], [0235]).
However, Scianamblo fails to disclose causing the bone drill to form helical waves in the intramedullary space. It would have been obvious to one of ordinary skill in the art at the time of the invention to modify the method of Scianamblo to include the bone drill forming sinusoidal waves in an intramedullary space, since it is well known in the art that the endodontic space is a bone cavity space and a method of preparing any bone cavity space can be used in preparing another bone cavity space. The motivation for doing so would be to provide a method of cleaning bone that is versatile for use with a variety of patients.

Regarding claim 29, Scianamblo teaches the method of claim 26, wherein the bone drill is comprised of a super-elastic alloy (para [0062]).

Supplemental Box

In case **the space in any of the preceding boxes is not sufficient.**
Continuation of:

Regarding claim 30, Scianamblo discloses a method of cleaning or enlarging an endodontic space ("a method of cleaning an endodontic cavity space": claim 41; para [0025]), the method comprising:
inserting the bone drill of claim 1 into the endodontic cavity (claim 41; para [0025]);
contacting the tip end of the bone drill against an inner surface of the cavity space (claim 41; para [0025]).
However, Scianamblo fails to disclose a method of cleaning an intramedullary space and rotating the bone drill so that the tapered body cuts along a dual axis, the dual axis comprising a first axis corresponding the axis of rotation and a second axis corresponding to an offset mass path which rotates around the axis of rotation. However, in an alternate embodiment, Scianamblo teaches rotating the bone drill so that the tapered body cuts along a dual axis, the dual axis comprising a first axis corresponding the axis of rotation and a second axis corresponding to an offset mass path which rotates around the axis of rotation (para [0023]). It would have been obvious to one of ordinary skill in the art at the time of the invention to modify the method of Scianamblo to include rotating the bone drill so that the tapered body cuts along a dual axis, the dual axis comprising a first axis corresponding the axis of rotation and a second axis corresponding to an offset mass path which rotates around the axis of rotation, as taught in the alternate embodiment, for the purpose of providing a bone drill that is capable of being used for preparing a variety of spaces.
Further, it would have been obvious to one of ordinary skill in the art at the time of the invention to modify the method of Scianamblo to include a method of cleaning an intramedullary space, since it is well known in the art that the endodontic space is a bone cavity space and a method of preparing any bone cavity space can be used in preparing another bone cavity space. The motivation for doing so would be to provide a method of cleaning bone that is versatile for use with a variety of patients.

Regarding claim 31, Scianamblo teaches the method of claim 30 but, wherein rotating the bone drill includes causing the bone drill to form sinusoidal waves within the cavity space (see claim 42; para [0025]). However, Scianamblo fails to disclose causing the bone drill to form sinusoidal waves in the intramedullary space. It would have been obvious to one of ordinary skill in the art at the time of the invention to modify the method of Scianamblo to include the bone drill forming sinusoidal waves in an intramedullary space, since it is well known in the art that the endodontic space is a bone cavity space and a method of preparing any bone cavity space can be used in preparing another bone cavity space. The motivation for doing so would be to provide a method of cleaning bone that is versatile for use with a variety of patients.

Regarding claim 32, Scianamblo teaches the method of claim 30 but, lacks the further teaching wherein rotating the bone drill includes causing the bone drill to form helical waves within the intramedullary space. In an alternate embodiment, shown in Fig. 31A, Scianamblo teaches wherein rotating the bone drill includes causing the bone drill to form helical waves within the endodontic cavity space (see claim 17; para [0021], [0024], [0235]).

Regarding claim 33, Scianamblo teaches the method of claim 30, wherein the bone drill is comprised of a super-elastic alloy (para [0062]).

Regarding claim 45, Scianamblo teaches the bone drill of claim 43 but, lacks the further teaching wherein the centers of mass of consecutive transverse cross-sections between the shank end and the free end form a mass path, and wherein at least a portion of the mass path is linear. However, in an alternate embodiment shown in Figs. 29A-29D, Scianamblo teaches the "instrument can have a linear section" (para [0231]) (see Figs. 29 and 29D). It would have been obvious to one of ordinary skill in the art at the time of the invention to modify the drill of Scianamblo to include wherein the centers of mass of consecutive transverse cross-sections between the shank end and the free end form a mass path, and wherein at least a portion of the mass path is linear, as taught in the alternate embodiment, for the purpose of providing a more versatile bone drill and to further enhance its use.

Regarding claim 46, Scianamblo teaches the bone drill of claim 43 but, lacks the further teaching wherein the drill body is substantially constant diameter from the shank end to the free end. However, in an alternate embodiment shown in Fig. 4, Scianamblo teaches the drill body (shaft 402) is substantially constant diameter from the shank end to the free end (Fig. 4). It would have been obvious to one of ordinary skill in the art at the time of the invention to modify the drill of Scianamblo to include the drill body being substantially constant diameter from the shank end to the free end, as taught in the alternate embodiment, for the purpose of providing a more versatile bone drill and to further enhance its use.

Regarding claim 48, Scianamblo teaches the bone drill of claim 47 but, lacks the further teaching wherein the tapered body includes a first transverse cross-section and a second transverse cross-section, wherein the first transverse cross-section has a first geometry; and wherein the second transverse cross-section has a second geometry different from the first geometry. However, in an alternate embodiment, Scianamblo teaches, the tapered body includes a first transverse cross-section and a second transverse cross-section, wherein the first transverse cross-section has a first geometry; and wherein the second transverse cross-section has a second geometry different from the first geometry (para [0018]). It would have been obvious to one of ordinary skill in the art at the time of the invention to modify the drill of Scianamblo to include the first and second geometries, as taught in the alternate embodiment, for the purpose of providing a more versatile bone drill.

Supplemental Box

In case **the space in any of the preceding boxes is not sufficient.**
Continuation of:

Regarding claim 49, Scianamblo teaches the bone drill of claim 47 but, lacks the further teaching wherein the tapered body cuts along a dual axis, the dual axis comprising a first axis corresponding the central axis of rotation and a second axis corresponding to an offset mass path which rotates around the central axis. However, in an alternate embodiment, Scianamblo teaches, the tapered body cuts along a dual axis, the dual axis comprising a first axis corresponding the central axis of rotation and a second axis corresponding to an offset mass path which rotates around the central axis (para [0023], [0231]). It would have been obvious to one of ordinary skill in the art at the time of the invention to modify the drill of Scianamblo to include the dual axis, as taught in the alternate embodiment, for the purpose of providing a more versatile bone drill capable of preparing a variety of bone spaces.

Regarding claim 50, Scianamblo discloses the bone drill of claim 43 but, lacks the further teaching wherein the drill body is tapered from the free end to the shank end such that the free end has a larger cutting diameter than the shank end. Scianamblo teaches drill body (where 2420 is shown in Fig. 31A) is tapered from the shank end to the free end such that the shank end has a larger cutting diameter than the free end (Fig. 31A). It would have been obvious to one of ordinary skill in the art at the time of the invention to modify the drill of Scianamblo to include the free end having a larger cutting diameter than the shank end, since rearranging parts of an invention involves only routine skill in the art. The motivation for doing so would be to providing a more versatile bone drill capable of preparing a variety of bone spaces.

Regarding claim 51, Scianamblo teaches the bone drill of claim 50 but, lacks the further teaching wherein the tapered body includes a first transverse cross-section and a second transverse cross-section, wherein the first transverse cross-section has a first geometry; and wherein the second transverse cross-section has a second geometry different from the first geometry. However, in an alternate embodiment, Scianamblo teaches, the tapered body includes a first transverse cross-section and a second transverse cross-section, wherein the first transverse cross-section has a first geometry; and wherein the second transverse cross-section has a second geometry different from the first geometry (para [0018]). It would have been obvious to one of ordinary skill in the art at the time of the invention to modify the drill of Scianamblo to include the first and second geometries, as taught in the alternate embodiment, for the purpose of providing a more versatile bone drill.

Regarding claim 52, Scianamblo teaches the bone drill of claim 50 but, lacks the further teaching wherein the tapered body cuts along a dual axis, the dual axis comprising a first axis corresponding the central axis of rotation and a second axis corresponding to an offset mass path which rotates around the central axis. However, in an alternate embodiment, Scianamblo teaches, the tapered body cuts along a dual axis, the dual axis comprising a first axis corresponding the central axis of rotation and a second axis corresponding to an offset mass path which rotates around the central axis (para [0023], [0231]). It would have been obvious to one of ordinary skill in the art at the time of the invention to modify the drill of Scianamblo to include the dual axis, as taught in the alternate embodiment, for the purpose of providing a more versatile bone drill capable of preparing a variety of bone spaces.

Regarding claim 53, Scianamblo teaches the bone drill of claim 43 but, lacks the further teaching wherein the drill body includes a transverse cross-section that is asymmetrical, bisymmetrical, symmetrical, biangular, triangular, or quadrilateral shaped. However, in an alternate embodiment shown in Figs. 21A-21E, Scianamblo teaches a drill body (working portion 1112; Fig. 21A) includes a transverse cross-section that is triangular (Figs. 21A-21E; para [0204]). It would have been obvious to one of ordinary skill in the art at the time of the invention to modify the drill of Scianamblo to include a transverse cross-section that is triangular, as taught in the alternate embodiment, for the purpose of providing a more versatile bone drill capable of preparing a variety of bone spaces.

Regarding claim 55, Scianamblo teaches the bone drill of claim 54 but, lacks the further teaching wherein the centers of mass of consecutive transverse cross-sections between the shank end and the free end form a mass path, and wherein the mass path comprises a spiral. However, in an alternate embodiment shown in Fig. 31A, Scianamblo teaches wherein the centers of mass of consecutive transverse cross-sections between the shank end and the free end form a mass path, and wherein the mass path comprises a spiral (see Fig. 31A). It would have been obvious to one of ordinary skill in the art at the time of the invention to modify the drill of Scianamblo to include a mass path that is spiral, as taught in the alternate embodiment, for the purpose of providing a more versatile bone drill capable of preparing a variety of bone spaces.

Supplemental Box

In case the space in any of the preceding boxes is not sufficient.
Continuation of:

Regarding claim 57, Scianamblo teaches the bone drill of claim 54, wherein the centers of mass of consecutive transverse cross-sections between the shank end and the free end form a mass path, wherein at least a portion of the mass path is curved (near 2242; Fig. 29), and wherein a center of mass of one transverse cross-section is on the center of rotation (see Fig. 29A; para [0231]).
However, Scianamblo fails to teach the center of mass of only one transverse cross-section is on the center of rotation. It would have been obvious to one of ordinary skill in the art at the time of the invention to modify the drill of Scianamblo to include the center of mass of only one transverse cross-section is on the center of rotation, since discovering the optimum or workable value of a result effective variable involves only routine skill in the art. The motivation for doing so would be to provide a more versatile bone drill capable of preparing a variety of bone spaces.

Regarding claim 58, Scianamblo teaches the bone drill of claim 57 but, lacks the further teaching wherein all centers of mass of each transverse cross-section are in a common plane. However, in an alternate embodiment shown in Figs. 27-27C, Scianamblo teaches all centers of mass of each transverse cross-section are in a common plane (Figs. 27-27C). It would have been obvious to one of ordinary skill in the art at the time of the invention to modify the drill of Scianamblo to include all centers of mass of each transverse cross-section are in a common plane, as taught in the alternate embodiment, for the purpose of providing a more versatile bone drill capable of preparing a variety of bone spaces.

Regarding claim 60, Scianamblo teaches the bone drill of claim 59 but, lacks the further teaching wherein all centers of mass of each transverse cross-section are in a common plane. However, in an alternate embodiment shown in Figs. 27-27C, Scianamblo teaches all centers of mass of each transverse cross-section are in a common plane (Figs. 27-27C). It would have been obvious to one of ordinary skill in the art at the time of the invention to modify the drill of Scianamblo to include all centers of mass of each transverse cross-section are in a common plane, as taught in the alternate embodiment, for the purpose of providing a more versatile bone drill capable of preparing a variety of bone spaces.

Regarding claim 61, Scianamblo teaches the bone drill of claim 54 but, lacks the further teaching wherein the centers of mass of consecutive transverse cross-sections between the shank end and the free end form a mass path, wherein a first portion of the mass path is offset from the axis of rotation by a substantially constant distance, and wherein a second portion of the mass path is offset from the axis of rotation by a distance that decreases monotonically. However, in an alternate embodiment shown in Figs. 30A-30B, Scianamblo teaches the centers of mass of consecutive transverse cross-sections between the shank end and the free end form a mass path, wherein a first portion of the mass path is offset from the axis of rotation by a substantially constant distance (near 2301 in Fig. 30A), and wherein a second portion of the mass path is offset from the axis of rotation by a distance that decreases monotonically (see Figs. 30A-30B). It would have been obvious to one of ordinary skill in the art at the time of the invention to modify the drill of Scianamblo, as taught in the alternate embodiment, for the purpose of providing a more versatile bone drill capable of preparing a variety of bone spaces.

Claims 1-3, 17, 19-20, 26-33, and 43-61 meet the criteria set out in PCT Article 33(4), and thus have industrial applicability because the subject matter claimed can be made or used in industry.

PATENT COOPERATION TREATY

PCT

INTERNATIONAL SEARCH REPORT

(PCT Article 18 and Rules 43 and 44)

Applicant's or agent's file reference 155130008WO2	**FOR FURTHER ACTION**	see Form PCT/ISA/220 as well as, where applicable, item 5 below.
International application No. PCT/US2014/051909	International filing **date** *(day/month/year)* 20 August 2014	(Earliest) **Priority Date** *(day/month/year)* 21 August 2013
Applicant SCIANAMBLO, MICHAEL J.		

This international search report has been prepared by this International Searching Authority and is transmitted to the applicant according to Article 18. A copy is being transmitted to the International Bureau.

This international search report consists of a total of 3 sheets.

☐ It is also accompanied by a copy of each prior art document cited in this report.

1. **Basis of the report**
   a. With regard to the **language**, the international search was carried out on the basis of:
      ☒ the international application in the language in which it was filed.
      ☐ a translation of the international application into _____ **which is the language of** a translation furnished for the purposes of international search (Rules 12.3(a) **and 23.1(b)**).
   b. ☐ This international search report has been established taking into account the **rectification of an obvious mistake** authorized by or notified to this Authority under Rule 91 (Rule 43.6*bis*(a)).
   c. ☐ With regard to any **nucleotide and/or amino acid sequence** disclosed in the international application, see Box No. I.

2. ☒ **Certain claims were found unsearchable** (see Box No II).

3. ☐ **Unity of invention is lacking** (see Box No. III).

4. With regard to **the title**,
   ☒ the text is approved as submitted by the applicant.
   ☐ the text has been established by this Authority to read as follows:

5. With regard to the **abstract**,
   ☒ the text is approved as submitted by **the applicant**.
   ☐ the text has been established, according to **Rule 38.2**, by this Authority as it appears in Box No. IV. The applicant may, within one month from the date of mailing of this international search report, submit comments to this Authority.

6. With regard to the **drawings**,
   a. the figure of the **drawings** to be published with the abstract is Figure No. 6D
      ☒ as suggested by the applicant.
      ☐ as selected by this Authority, because **the applicant failed to suggest** a figure.
      ☐ as selected by this Authority, because this figure better characterizes the invention.
   b. ☐ none of the figures is to be published with the abstract.

INTERNATIONAL SEARCH REPORT

International application No.
PCT/US2014/051909

Box No. II Observations where certain claims were found unsearchable (Continuation of item 2 of first sheet)

This international search report has not been established in respect of certain claims under Article 17(2)(a) for the following reasons:

1. ☐ Claims Nos.:
because they relate to subject matter not required to be searched by this Authority, namely:

2. ☐ Claims Nos.:
because they relate to parts of the international application that do not comply with the prescribed requirements to such an extent that no meaningful international search can be carried out, specifically:

3. ☒ Claims Nos.: 4-18
because they are dependent claims and are not drafted in accordance with the second and third sentences of Rule 6.4(a).

Box No. III Observations where unity of invention is lacking (Continuation of item 3 of first sheet)

This International Searching Authority found multiple inventions in this international application, as follows:

1. ☐ As all required additional search fees were timely paid by the applicant, this international search report covers all searchable claims.

2. ☐ As all searchable claims could be searched without effort justifying additional fees, this Authority did not invite payment of additional fees.

3. ☐ As only some of the required additional search fees were timely paid by the applicant, this international search report covers only those claims for which fees were paid, specifically claims Nos.:

4. ☐ No required additional search fees were timely paid by the applicant. Consequently, this international search report is restricted to the invention first mentioned in the claims; it is covered by claims Nos.:

Remark on Protest

☐ The additional search fees were accompanied by the applicant's protest and, where applicable, the payment of a protest fee.

☐ The additional search fees were accompanied by the applicant's protest but the applicable protest fee was not paid within the time limit specified in the invitation.

☐ No protest accompanied the payment of additional search fees.

INTERNATIONAL SEARCH REPORT

International application No.
PCT/US2014/051909

A. CLASSIFICATION OF SUBJECT MATTER
IPC(8) - B23B 51/02 (2014.01)
CPC - B23B 51/02 (2014.10)
According to International Patent Classification (IPC) or to both national classification and IPC

B. FIELDS SEARCHED

Minimum documentation searched (classification system followed by classification symbols)
IPC(8) - A61C 5/02; B23B 51/02; B27G 15/00; B28D 1/14 (2014.01)
CPC - A61C 5/02; B23B 51/02; B27G 15/00; B28D 1/14 (2014.10)

Documentation searched other than minimum documentation to the extent that such documents are included in the fields searched
USPC - 408/227,229,230; 433/102 (keyword delimited)

Electronic data base consulted during the international search (name of data base and, where practicable, search terms used)

PatBase, Google Patents, Google, YouTube
Search terms used: drill, bit, center, mass, land, margin, shank, precession, sine, sinusoid, wave

C. DOCUMENTS CONSIDERED TO BE RELEVANT

Category*	Citation of document, with indication, where appropriate, of the relevant passages	Relevant to claim No.
X	US 2012/0034043 A1 (KRIEG et al) 09 February 2012 (09.02.2012) entire document	1,3,20,25,26,28,36-39,46-48,51,54,57-60,63-65,68,70
Y		19,21-23,27,29-35,40-45,49,50,52,53,55,56,66,67,69,71,72
Y	US 2004/0023186 A1 (MCSPADDEN) 05 February 2004 (05.02.2004) entire document	19,22,43-45,50,53,67,69
Y	US 2007/0015107 A1 (MANNSCHEDEL et al) 18 January 2007 (18.01.2007) entire document	21,23,27,32,49,52,66
Y	US 2004/0219485 A1 (SCIANAMBLO) 04 November 2004 (04.11.2004) entire document	29,30,31,40-42,44
Y	US 2006/0111724 A1 (YEUNG WAI PING) 25 May 2006 (25.05.2006) entire document	33,35
Y	ULTIMATE HANDYMAN. Drilling through walls. YouTube. 23 September 2011 [retrieved on 11 November 2014]. Retrieved from the internet: <URL: https://www.youtube.com/watch?v=fpFUxlcH2Lg> entire document	34,35
Y	EP 1 213 074 A2 (MIESCHER et al) 12 June 2002 (12.06.2002) see machine translation	55,56,71,72

☐ Further documents are listed in the continuation of Box C. ☐

* Special categories of cited documents:
"A" document defining the general state of the art which is not considered to be of particular relevance
"E" earlier application or patent but published on or after the international filing date
"L" document which may throw doubts on priority claim(s) or which is cited to establish the publication date of another citation or other special reason (as specified)
"O" document referring to an oral disclosure, use, exhibition or other means
"P" document published prior to the international filing date but later than the priority date claimed
"T" later document published after the international filing date or priority date and not in conflict with the application but cited to understand the principle or theory underlying the invention
"X" document of particular relevance; the claimed invention cannot be considered novel or cannot be considered to involve an inventive step when the document is taken alone
"Y" document of particular relevance; the claimed invention cannot be considered to involve an inventive step when the document is combined with one or more other such documents, such combination being obvious to a person skilled in the art
"&" document member of the same patent family

Date of the actual completion of the international search	Date of mailing of the international search report
11 November 2014	22 DEC 2014
Name and mailing address of the ISA/US Mail Stop PCT, Attn: ISA/US, Commissioner for Patents P.O. Box 1450, Alexandria, Virginia 22313-1450 Facsimile No. 571-273-3201	Authorized officer: Blaine R. Copenheaver PCT Helpdesk: 571-272-4300 PCT OSP: 571-272-7774

Form PCT/ISA/210 (second sheet) (July 2009)

PATENT COOPERATION TREATY

From the
INTERNATIONAL SEARCHING AUTHORITY

To: PAUL WESTERN
FISH & RICHARDSON P.C.
P. O. BOX 1022
MINNEAPOLIS, MN 55440-1022

PCT

WRITTEN OPINION OF THE
INTERNATIONAL SEARCHING AUTHORITY

(PCT Rule 43*bis*.1)

Date of mailing (*day/month/year*) 22 DEC 2014

Applicant's or agent's file reference
155130008WO2

FOR FURTHER ACTION
See paragraph 2 below

International application No.	International filing date (*day/month/year*)	Priority date (*day/month/year*)
PCT/US2014/051909	20 August 2014	21 August 2013

International Patent Classification (IPC) or both national classification and IPC
IPC(8) - B23B 51/02 (2014.01)
CPC - B23B 51/02 (2014.10)

Applicant SCIANAMBLO, MICHAEL J.

1. This opinion contains indications relating to the following items:

- [x] Box No. I Basis of the opinion
- [ ] Box No. II Priority
- [x] Box No. III Non-establishment of opinion with regard to novelty, inventive step and industrial applicability
- [ ] Box No. IV Lack of unity of invention
- [x] Box No. V Reasoned statement under Rule 43*bis*.1(a)(i) with regard to novelty, inventive step or industrial applicability; citations and explanations supporting such statement
- [ ] Box No. VI Certain documents cited
- [ ] Box No. VII Certain defects in the international application
- [ ] Box No. VIII Certain observations on the international application

2. **FURTHER ACTION**

If a demand for international preliminary examination is made, this opinion will be considered to be a written opinion of the International Preliminary Examining Authority ("IPEA") except that this does not apply where the applicant chooses an Authority other than this one to be the IPEA and the chosen IPEA has notified the International Bureau under Rule 66.1 *bis*(b) that written opinions of this International Searching Authority will not be so considered.

If this opinion is, as provided above, considered to be a written opinion of the IPEA, the applicant is invited to submit to the IPEA a written reply together, where appropriate, with amendments, before the expiration of 3 months from the date of mailing of Form PCT/ISA/220 or before the expiration of 22 months from the priority date, whichever expires later.

For further options, see Form PCT/ISA/220.

Name and mailing address of the ISA/US	Date of completion of this opinion	Authorized officer:
Mail Stop PCT, Attn: ISA/US Commissioner for Patents P.O. Box 1450, Alexandria, Virginia 22313-1450 Facsimile No. 571-273-3201	11 November 2014	Blaine R. Copenheaver PCT Helpdesk: 571-272-4300 PCT OSP: 571-272-7774

Form PCT/ISA/237 (cover sheet) (July 2011)

WRITTEN OPINION OF THE INTERNATIONAL SEARCHING AUTHORITY

International application No.
PCT/US2014/051909

Box No. I Basis of this opinion

1. With regard to the **language**, this opinion has been established on the basis of:

   ☒ the international application in the language in which it was filed.

   ☐ a translation of the international application into _____ which is the language of a translation furnished for the purposes of international search (Rules 12.3(a) and 23.1(b)).

2. ☐ This opinion has been established taking into account the **rectification of an obvious mistake** authorized by or notified to this Authority under Rule 91 (Rule 43*bis*.1(a))

3. With regard to any **nucleotide and/or amino acid sequence** disclosed in the international application, this opinion has been established on the basis of a sequence listing filed or furnished:

   a. (means)

   ☐ on paper

   ☐ in electronic form

   b. (time)

   ☐ in the international application as filed

   ☐ together with the international application in electronic form

   ☐ subsequently to this Authority for the purposes of search

4. ☐ In addition, in the case that more than one version or copy of a sequence listing has been filed or furnished, the required statements that the information in the subsequent or additional copies is identical to that in the application as filed or does not go beyond the application as filed, as appropriate, were furnished.

5. Additional comments:

WRITTEN OPINION OF THE INTERNATIONAL SEARCHING AUTHORITY

International application No.
PCT/US2014/051909

Box No. III Non-establishment of opinion with regard to novelty, inventive step and industrial applicability

The questions whether the claimed invention appears to be novel, to involve an inventive step (to be non obvious), or to be industrially applicable have not been examined in respect of:

☐ the entire international application.

☒ claims Nos. 4-18

because:

☐ the said international application, or the said claims Nos. _____ relate to the following subject matter which does not require an international search *(specify)*:

☒ the description, claims or drawings *(indicate particular elements below)* or said claims Nos. 4-18 are so unclear that no meaningful opinion could be formed *(specify)*:

Claims 4-18 are multiple dependent claims not drafted in accordance with the second and third sentences of Rule 6.4(a).

☐ the claims, or said claims Nos. _____ are so inadequately supported by the description that no meaningful opinion could be formed *(specify)*:

☒ no international search report has been established for said claims Nos. 4-18

☐ a meaningful opinion could not be formed without the sequence listing; the applicant did not, within the prescribed time limit

☐ furnish a sequence listing on paper complying with the standard provided for in Annex C of the Administrative Instructions, and such listing was not available to the International Searching Authority in a form and mannerceptable to it.

☐ furnish a sequence listing in electronic form complying with the standard provided for in Annex C of the Administrative Instructions, and such listing was not available to the International Searching Authority in a form and mannerceptable to it.

☐ pay the required late furnishing fee for the furnishing of a sequence listing in response to an invitation under Rule 13*ter*.1(a) or (b).

☐ See Supplemental Box for further details.

Box No. V **Reasoned statement under Rule 43*bis*.1(a)(i) with regard to novelty, inventive step or industrial applicability; citations and explanations supporting such statement**

1. Statement

Novelty (N)	Claims	2,19,21-24,27,29-35,40-45,49,50,52,53,55,56,61,62,66,67,69,71,72	YES
	Claims	1,3,20,25,26,28,36-39,46-48,51,54,57-60,63-65,68,70	NO
Inventive step (IS)	Claims	2,24,61,62	YES
	Claims	1,3,19-23,25-60,63-72	NO
Industrial applicability (IA)	Claims	1-3,19-72	YES
	Claims	None	NO

2. Citations and explanations:

Claims 1,3,20,25,26,28,36-39,46-48,51,54,57-60,63-65,68,70 lack novelty under PCT Article 33(2) as being anticipated by Krieg et al., hereinafter referred to as Krieg.

Regarding claim 1, Krieg discloses A cutting instrument (cutting tool 10, Fig. 1), comprising:
a shank (29, Fig. 1) configured to be releasably attachable to a motor (motor of drill of "drill bit", Para. [0020]) to rotate the cutting instrument (10, Fig. 1) about an axis of rotation (axis at CP, Fig. 3; "At a rearward end 27 of the shaft 15 is a shank 29, which may be generally cylindrical, or may have a non-cylindrical shape to fit within a chuck, not shown.", Para. [0013]; "FIG. 3 is a resultant force diagram for the cutting tool 10, e.g., the drill bit, in accordance with an aspect of the invention.", Para. [0020]; Thus, the drill including the chuck and drill bit will also have a motor.); and
a drill body (body to the right of 29, Fig. 1) extending from the shank (29; as in Fig. 1), the drill body (body to the right of 29, Fig. 1) including a shank end (left end of body to the right of 29, Fig. 1) where the drill body (body to the right of 29, Fig. 1) extends from the shank (29; as in Fig. 1) and a free end (right end of body to the right of 29, Fig. 1) at an end of the drill body (body to the right of 29, Fig. 1) that is opposite of the shank end (left end of body to the right of 29; as in Fig. 1), the drill body (body to the right of 29, Fig. 1) including a cutting portion (cutting portion of body to the right of 29, Fig. 1) between the shank end (left end of body to the right of 29, Fig. 1) and the free end (right end of body to the right of 29; as in Fig. 1), the drill body (body to the right of 29, Fig. 1) comprising a plurality of transverse cross-sections (as in Fig. 2), each transverse cross-section of the drill body (body to the right of 29, Fig. 1) having a center of mass (as in Fig. 2),
the drill body (body to the right of 29, Fig. 1) having a center of mass path that is defined by the centers of mass of all transverse cross-sections of the body (body to the right of 29; as in Figs. 1-3), wherein a center of mass of a transverse crosssection (cross section of Fig. 2) at the shank end (left end of body to the right of 29, Fig. 1) is offset from the axis of rotation (axis at CP, Fig. 3; Since land 38 has less material than lands 34 and 42, the center of mass will not line up with the axis at CP, Fig. 2), and a center of mass of a transverse cross-section (cross section at right tip of body to the right of 29, Fig. 1) at the free end (right end of body to the right of 29, Fig. 1) lies on or near the axis of rotation (axis at CP, Fig. 3; The center of mass of the cross section at the right tip of the body to the right of 29 in Figure 1 will lie at CP because the material at the radially outer ends of lands 38,34,42 shown in Figure 2 will be removed to form the tip.).

Regarding claim 3, Krieg discloses all the limitations of claim 1 or 2, and Krieg discloses wherein the center of mass of the transverse cross-section at the free end (cross section at right tip of body to the right of 29, Fig. 1) lies on the axis of rotation (The center of mass of the cross section at the right tip of the body to the right of 29 in Figure 1 will lie at CP because the material at the radially outer ends of lands 38,34,42 shown in Figure 2 will be removed to form the tip.).

Regarding claim 20, Krieg discloses all the limitations of claim 1, and Krieg discloses wherein the cutting instrument (cutting tool 10, Fig. 1) has at least two regions of differing diametrical taper (taper to the right of 29, Fig.1; taper at right tip of 10, Fig. 1).

Regarding claim 25, Krieg discloses all the limitations of claim 1, and Krieg discloses wherein the cutting portion (cutting portion of body to the right of 29, Fig. 1) includes radial lands (34,38,42,Fig. 2) with one or more margins (44,48,52; as in Fig. 2).

Regarding claim 26, Krieg discloses all the limitations of claim 1, and Krieg discloses wherein the cutting instrument (cutting tool 10, Fig. 1) consists of one type of material (as in Fig. 1).

Supplemental Box

In case **the space in any of the preceding boxes is not sufficient.**
Continuation of:

Regarding claim 28, Krieg discloses A method of cutting (with cutting tool 10, Fig. 1) a space in a material (material of "hole wall", Para. [0020]; "The [other patent publications] describe the problem known in the technical literature as "chatter", a problem that is experienced with a drill during the drilling process when the irregular rotational action of the drill during the drilling process results in an irregular surface structure of the boring wall", Para. [0003]; "This arrangement causes the largest margin 52 to act as a guiding land, acting against the disruptive forces of chatter by always maintaining contact with the hole wall, and therefore damping radial motion. In this three flute arrangement of the invention, margin 44 also acts in support of margin 52 to actively engage in contact with the hole wall and, as it is positioned along a third cutting edge and allows a higher feedrate to be achieved. These characteristics in turn cause the holemaking process to have greatly enhanced size, straightness, and cylindricity control at much higher metal removal rates than without use of the invention.", Para. [0020]), the method comprising:
driving, using a motor (motor of drill of "drill bit", Para. [0020]), the cutting instrument (10, Fig. 1) of claim 1 (see claim 1; "At a rearward end 27 of the shaft 15 is a shank 29, which may be generally cylindrical, or may have a non-cylindrical shape to fit within a chuck, not shown.", Para. [0013]; "FIG. 3 is a resultant force diagram for the cutting tool 10, e.g., the drill bit, in accordance with an aspect of the invention.", Para. [0020]; Thus, the drill including the chuck and drill bit will also have a motor.);
contacting, while driving the cutting instrument (10, Fig. 1), the free end (right end of body to the right of 29, Fig. 1) of the cutting instrument (10, Fig. 1) against the material (material of "hole wall"; as in Paras. [0003],[0020]); and
extending, while driving the cutting instrument (10, Fig. 1), at least a portion of the cutting instrument (10, Fig. 1) into the material (material of "hole wall", Para. [0020]) to remove portions of the material (material of "hole wall", Para. [0020]) to thereby create the space in the material (material of "hole wall"; as in Paras. [0003],[0020]).

Regarding claim 36, Krieg discloses A cutting instrument (cutting tool 10, Fig. 1), comprising:
a shank (29, Fig. 1) configured to be releasably attachable to a motor (motor of drill of "drill bit", Para. [0020]) to rotate the cutting instrument (10, Fig. 1) about an axis of rotation (axis at CP, Fig. 3; "At a rearward end 27 of the shaft 15 is a shank 29, which may be generally cylindrical, or may have a non-cylindrical shape to fit within a chuck, not shown ", Para. [0013]; "FIG. 3 is a resultant force diagram for the cutting tool 10, e.g., the drill bit, in accordance with an aspect of the invention.", Para. [0020]; Thus, the drill including the chuck and drill bit will also have a motor.); and
a drill body (body to the right of 29, Fig. 1) extending from the shank (29; as in Fig. 1), the drill body (body to the right of 29, Fig. 1) including a shank end (left end of body to the right of 29; as in Fig. 1) where the drill body (body to the right of 29, Fig. 1) extends from the shank (29, Fig. 1) and a free end (right end of body to the right of 29, Fig. 1) at an end of the drill body (body to the right of 29, Fig. 1) that is opposite of the shank end (left end of body to the right of 29; as in Fig. 1), the drill body (body to the right of 29, Fig. 1) including a cutting portion (cutting portion of body to the right of 29, Fig. 1) between the shank end (left end of body to the right of 29, Fig. 1) and the free end (right end of body to the right of 29; as in Fig. 1), the drill body (body to the right of 29, Fig. 1) comprising a plurality of transverse cross-sections (as in Fig. 2), each transverse cross-section of the drill body (body to the right of 29, Fig. 1) having a center of mass (as in Fig. 2), the drill body (body to the right of 29, Fig. 1) having a center of mass path that is defined by the centers of mass of all transverse cross-sections of the body (body to the right of 29; as in Figs. 1-3), wherein a center of mass of a transverse crosssection at the shank end (left end of body to the right of 29, Fig. 1) is offset from the axis of rotation (axis at CP, Fig. 3; as in Fig. 2) and a center of mass of a transverse cross-section (cross section at 32, Fig. 1) at the free end (right end of body to the right of 29, Fig. 1) is offset from the axis of rotation (axis at CP, Fig. 3; as in Fig. 2), and wherein a distance from a center of mass of each transverse cross-section between the shank end (left end of body to the right of 29, Fig. 1) and the free end (right end of body to the right of 29, Fig. 1) is offset from the axis of rotation (axis at CP, Fig. 3) by a substantially consistent distance (Since all the cross sections will be the same, all the distances from a center of mass of each transverse cross-section will be offset from the axis of rotation by a substantially constant distance.).

Regarding claim 37, Krieg discloses all the limitations of claim 36, and Krieg discloses wherein the center of mass path between the shank end (left end of body to the right of 29, Fig. 1) and the free end (right end of body to the right of 29; as in Fig. 1) comprises a helix (as in Figs. 1,2).

Regarding claim 38, Krieg discloses all the limitations of claim 36, and Krieg discloses wherein at least a portion of the center of mass path (between the left end of body to the right of 29 and the right end of body to the right of 29, Fig. 1) is linear (at center of mass path between taper to the right of 29 and left end of flute 40; in Fig. 1).

Regarding claim 39, Krieg discloses all the limitations of claim 36, and Krieg discloses wherein the drill body (body to the right of 29, Fig. 1) is substantially constant diameter from the shank end (left end of body to the right of 29, Fig. 1) to the free end (right end of body to the right of 29; as in Fig. 1).

Regarding claim 46, Krieg discloses all the limitations of claim 36, and Krieg discloses wherein the drill body (body to the right of 29, Fig. 1) includes a transverse cross-section that is asymmetrical (as in Fig. 2), bisymmetrical, symmetrical, triangular, or quadrilateral shaped.

Regarding claim 47, Krieg discloses all the limitations of claim 36, and Krieg discloses wherein the cutting portion (cutting portion of body to the right of 29, Fig. 1) includes radial lands (lands 38,34,42, Fig. 2) with one or more margins (margins 44,48,52, Fig. 2).

Regarding claim 48, Krieg discloses all the limitations of claim 36, and Krieg discloses wherein the cutting instrument (cutting tool 10, Fig. 1) consists of one type of material (as in.Fig. 1).

Supplemental Box

In case the space in any of the preceding boxes is not sufficient.
Continuation of:

Regarding claim 51, Krieg discloses all the limitations of claim 36, and Krieg discloses wherein the cutting instrument (cutting tool 10, Fig. 1) has at least two regions of differing diametrical taper (taper to the right of 29, Fig.1; taper at right tip of 10, Fig. 1).

Regarding claim 54, Krieg discloses all the limitations of claim 36, and Krieg discloses comprising a chisel tip at the free end of the drill body (body to the right of 29; as in Fig. 1).

Regarding claim 57, Krieg discloses A cutting instrument (cutting tool 10, Fig. 1), comprising:
a shank (29, Fig. 1) configured to be releasably attachable to a motor (motor of drill of "drill bit", Para. [0020]) to rotate the cutting instrument (10, Fig. 1) about an axis of rotation (axis at CP, Fig. 3; "At a rearward end 27 of the shaft 15 is a shank 29, which may be generally cylindrical, or may have a non-cylindrical shape to fit within a chuck, not shown.", Para. [0013]; Thus, the drill including the chuck and drill bit will also have a motor.); and
a drill body (body to the right of 29, Fig. 1) extending from the shank (29; as in Fig. 1), the drill body (body to the right of 29, Fig. 1) including a shank end (left end of body to the right of 29, Fig. 1) where the drill body (body to the right of 29, Fig. 1) extends from the shank (29, Fig. 1) and a free end (right end of body to the right of 29, Fig. 1) at an end of the drill body (body to the right of 29, Fig. 1) that is opposite of the shank end (left end of body to the right of 29; as in Fig. 1), the drill body (body to the right of 29, Fig. 1) including a cutting portion (cutting portion of body to the right of 29, Fig 1) between the shank end (left end of body to the right of 29, Fig. 1) and the free end (right end of body to the right of 29; as in Fig. 1), the drill body (body to the right of 29, Fig. 1) comprising a plurality of transverse cross-sections (as in Fig. 2), each transverse cross-section of the drill body (body to the right of 29, Fig. 1) having a center of mass (as in Fig. 2), the drill body (body to the right of 29, Fig. 1) having a center of mass path that is defined by the centers of mass of all transverse cross-sections of the body (body to the right of 29; as in Fig. 1), wherein a center of mass of a transverse crosssection at the shank end (left end of body to the right of 29, Fig. 1) is offset from the axis of rotation (axis at CP, Fig 3; as in Fig. 2) and a center of mass of a transverse cross-section (cross section at 32, Fig. 1) at the free end (right end of body to the right of 29, Fig. 1) is offset from the axis of rotation (axis at CP, Fig. 3; as in Fig. 2).

Regarding claim 58, Krieg discloses all the limitations of claim 57, and Krieg discloses wherein the center of mass path (between the left end of body to the right of 29 and the right end of body to the right of 29, Fig. 1) comprises a three dimensional spiral that revolves around the axis of rotation (axis at CP; as in Fig. 3).

Regarding claim 59, Krieg discloses all the limitations of claim 57, and Krieg discloses wherein at least a portion of the center of mass path (between the left end of body to the right of 29 and the right end of body to the right of 29, Fig. 1) is substantially linear (at center of mass path between taper to the right of 29 and left end of flute 40; in Fig. 1).

Regarding claim 60, Krieg discloses all the limitations of claim 57, and Krieg discloses wherein at least a portion of the center of mass path (between the left end of body to the right of 29 and the right end of body to the right of 29, Fig. 1) is curved (as in Figs. 1,2).

Regarding claim 63, Krieg discloses all the limitations of claim 57, and Krieg discloses wherein the drill body (body to the right of 29, Fig. 1) includes a transverse cross-section that is asymmetrical (as in Fig. 2), bisymmetrical, symmetrical, triangular, or quadrilateral shaped.

Regarding claim 64, Krieg discloses all the limitations of claim 57, and Krieg discloses wherein the cutting portion (cutting portion of body to the right of 29, Fig. 1) includes radial lands (lands 38,34,42, Fig. 2) with one or more margins (margins 44,48,52, Fig. 2).

Regarding claim 65, Krieg discloses all the limitations of claim 57, and Krieg discloses wherein the cutting instrument (cutting tool 10, Fig. 1) consists of one type of material (as in Fig. 1).

Regarding claim 68, Krieg discloses all the limitations of claim 57, and Krieg discloses wherein the cutting instrument (cutting tool 10, Fig. 1) has at least two regions of differing diametrical taper (taper to the right of 29, Fig.1; taper at right tip of 10, Fig. 1).

Regarding claim 70, Krieg discloses all the limitations of claim 57, and Krieg discloses comprising a chisel tip at the free end of the drill body (body to the right of 29; as in Fig. 1).

Claims 19,22,43,45,50,53,67,69 lack an inventive step under PCT Article 33(3) as being obvious over Krieg et al., hereinafter referred to as Krieg in view of McSpadden.

Regarding claim 19, Krieg discloses all the limitations of claim 1, but Krieg does not explicitly disclose wherein flutes of the cutting instrument have differing degrees of diametrical taper when viewed in longitudinal cross-section.
However, McSpadden, in the field of cutting instrument (Abstract), teaches wherein flutes (126, Fig. 2D) of the cutting instrument (100, Fig. 2A) have differing degrees of diametrical taper when viewed in longitudinal cross-section (Note hourglass shape of taper in Fig. 2A.).
Therefore, it would have been obvious to one of ordinary skill in the art at the time of the invention to provide wherein flutes of the cutting instrument have differing degrees of diametrical taper when viewed in longitudinal cross-section, as taught by McSpadden, to the cutting instrument of Krieg, for the purpose of improving the durability and cutting power of the cutting instrument.

Supplemental Box

In case the space in any of the preceding boxes is not sufficient.
Continuation of:

Regarding claim 22, Krieg discloses all the limitations of claim 1, but Krieg does not explicitly disclose wherein the cutting portion includes radial lands without margins.
However, McSpadden, in the field of cutting instrument (Abstract), teaches wherein the cutting portion includes radial lands (flat portions of hexagon, Fig. 4B) without margins (as in Figs. 2D,4B).
Therefore, it would have been obvious to one of ordinary skill in the art at the time of the invention to provide wherein the cutting portion includes radial lands without margins, as taught by McSpadden, to the cutting instrument of Krieg, for the purpose of improving the durability and cutting power of the cutting instrument.

Regarding claim 43, Krieg discloses all the limitations of claim 36, but Krieg does not explicitly disclose wherein the drill body is tapered from the free end to the shank end such that the free end has a larger cutting diameter than the shank end.
However, McSpadden, in the field of cutting instrument (Abstract), teaches wherein the drill body is tapered from the free end (lower end of 100, Fig. 2A) to the shank end (upper end of 100, Fig. 2A) such that the free end (lower end of 100, Fig. 2A) has a larger cutting diameter than the shank end (upper end of 100, Fig. 2A; Note hourglass shape of taper in Fig. 2A.).
Therefore, it would have been obvious to one of ordinary skill in the art at the time of the invention to provide wherein the drill body is tapered from the free end to the shank end such that the free end has a larger cutting diameter than the shank end, as taught by McSpadden, to the cutting instrument of Krieg, for the purpose of improving the durability and cutting power of the cutting instrument.

Regarding claim 45, modified Krieg discloses all the limitations of claim 43, and Krieg discloses wherein the tapered body cuts along a dual axis, the dual axis comprising a first axis (axis at CP, Fig. 3) corresponding the central axis of rotation (as in Fig. 3) and a second axis (axis at center of mass, Fig. 2) corresponding to an offset mass path which rotates around the central axis (axis at CP; as in Figs. 1-3).

Regarding claim 50, Krieg discloses all the limitations of claim 36, but Krieg does not explicitly disclose wherein flutes of the cutting instrument have differing degrees of diametrical taper when viewed in longitudinal cross-section.
However, McSpadden, in the field of cutting instrument (Abstract), teaches wherein flutes (126, Fig. 2D) of the cutting instrument (100, Fig. 2A) have differing degrees of diametrical taper when viewed in longitudinal cross-section (Note hourglass shape of taper in Fig. 2A.).
Therefore, it would have been obvious to one of ordinary skill in the art at the time of the invention to provide wherein flutes of the cutting instrument have differing degrees of diametrical taper when viewed in longitudinal cross-section, as taught by McSpadden, to the cutting instrument of Krieg, for the purpose of improving the durability and cutting power of the cutting instrument.

Regarding claim 53, Krieg discloses all the limitations of claim 36, but Krieg does not explicitly disclose wherein the cutting portion includes radial lands without margins.
However, McSpadden, in the field of cutting instrument (Abstract), teaches wherein the cutting portion includes radial lands (flat portions of hexagon, Fig. 4B) without margins (as in Figs. 2D,4B).
Therefore, it would have been obvious to one of ordinary skill in the art at the time of the invention to provide wherein the cutting portion includes radial lands without margins, as taught by McSpadden, to the cutting instrument of Krieg, for the purpose of improving the durability and cutting power of the cutting instrument.

Regarding claim 67, Krieg discloses all the limitations of claim 57, but Krieg does not explicitly disclose wherein flutes of the cutting instrument have differing degrees of diametrical taper when viewed in longitudinal cross-section.
However, McSpadden, in the field of cutting instrument (Abstract), teaches wherein flutes (126, Fig. 2D) of the cutting instrument (100, Fig. 2A) have differing degrees of diametrical taper when viewed in longitudinal cross-section (Note hourglass shape of taper in Fig. 2A.).
Therefore, it would have been obvious to one of ordinary skill in the art at the time of the invention to provide wherein flutes of the cutting instrument have differing degrees of diametrical taper when viewed in longitudinal cross-section, as taught by McSpadden, to the cutting instrument of Krieg, for the purpose of improving the durability and cutting power of the cutting instrument.

Regarding claim 69, Krieg discloses all the limitations of claim 57, but Krieg does not explicitly disclose wherein the cutting portion includes radial lands without margins.
However, McSpadden, in the field of cutting instrument (Abstract), teaches wherein the cutting portion includes radial lands (flat portions of hexagon, Fig. 4B) without margins (as in Figs. 2D,4B).
Therefore, it would have been obvious to one of ordinary skill in the art at the time of the invention to provide wherein the cutting portion includes radial lands without margins, as taught by McSpadden, to the cutting instrument of Krieg, for the purpose of improving the durability and cutting power of the cutting instrument.

Supplemental Box

In case the space in any of the preceding boxes is not sufficient.
Continuation of:

Claims 21,23,27,32,49,52,66 lack an inventive step under PCT Article 33(3) as being obvious over Krieg et al., hereinafter referred to as Krieg in view of Mannschedel.

Regarding claim 21, Krieg discloses all the limitations of claim 1, but Krieg does not explicitly disclose wherein the cutting portion is coated with one of the group consisting of diamond, amorphous diamond, diamond compact bits, and diamond-like carbon.
However, Mannschedel, in the field of cutting instrument (Abstract), teaches wherein the cutting portion (root canal drill bit 21, Fig. 8) is coated with one of the group consisting of diamond ("this root canal drill bit 21 gives rise to a root canal instrument 80, which has abrasive particles on its cutting edges 22 and 23.", Para. [0065]; "wherein the abrasive particles comprise ceramic particles, diamond particles", Claim 4), amorphous diamond, diamond compact bits, and diamond-like carbon.
Therefore, it would have been obvious to one of ordinary skill in the art at the time of the invention to provide wherein the cutting portion is coated with one of the group consisting of diamond, amorphous diamond, diamond compact bits, and diamond-like carbon, as taught by Mannschedel, to the cutting instrument of Krieg, for the purpose of improving the durability and cutting power of the cutting instrument.

Regarding claim 23, Krieg discloses all the limitations of claim 1, but Krieg does not explicitly disclose wherein the cutting portion is coated with one of the group consisting of titanium nitride, titanium aluminum nitride, titanium carbon nitride, zirconium nitride, and black oxide.
However, Mannschedel, in the field of cutting instrument (Abstract), teaches wherein the cutting portion (root canal drill bit 21, Fig. 8) is coated with a material ("this root canal drill bit 21 gives rise to a root canal instrument 80, which has abrasive particles on its cutting edges 22 and 23.", Para. [0065]; "wherein the abrasive particles comprise ceramic particles, diamond particles, corundum particles, boron nitride particles, boron carbide particles, silicon particles, silicon nitride particles and/or silicon carbide particles.", Claim 4), amorphous diamond, diamond compact bits, and diamond-like carbon.
Therefore, it would have been obvious to one of ordinary skill in the art at the time of the invention to provide wherein the cutting portion is coated with a material, as taught by Mannschedel, to the cutting instrument of Krieg, for the purpose of improving the durability and cutting power of the cutting instrument.
Further, it would have been obvious to one of ordinary skill in the art at the time the invention was made to select a known material for the coating, since selection of a known material on the basis of its suitability for an intended use involves only routine skill in the art. The motivation for doing so would be to improve the cutting ability of the cutting instrument.

Regarding claim 27, Krieg discloses all the limitations of claim 1, but Krieg does not explicitly disclose wherein a portion of the cutting body at the free end comprises a first type of material and other portions of the cutting body comprise a second type of material that is different than the first type of material.
However, Mannschedel, in the field of cutting instrument (Abstract), teaches wherein a portion of the cutting body (body of root canal drill bit 21, Fig. 8) at the free end (lower end, Fig. 8) comprises a first type of material ("this root canal drill bit 21 gives rise to a root canal instrument 80, which has abrasive particles on its cutting edges 22 and 23.", Para. [0065]; "wherein the abrasive particles comprise ceramic particles, diamond particles, corundum particles, boron nitride particles, boron carbide particles, silicon particles, silicon nitride particles and/or silicon carbide particles.", Claim 4) and other portions of the cutting body (body of root canal drill bit 21, Fig. 8) comprise a second type of material ("In this case, production of the core 7 does not start from a prefabricated conical rod which narrows towards the proximal end 10 as the core but rather starts from a basic plate produced using a core material such as nickel-titanium alloy and/or a plastics material.", Para. [0064]) that is different than the first type of material (as in Paras. [0064] and Claim 4).
Therefore, it would have been obvious to one of ordinary skill in the art at the time of the invention to provide wherein a portion of the cutting body at the free end comprises a first type of material and other portions of the cutting body comprise a second type of material that is different than the first type of material, as taught by Mannschedel, to the cutting instrument of Krieg, for the purpose of improving the weight and cutting power of the cutting instrument.

Regarding claim 32, Krieg discloses all the limitations of claim 28, but Krieg does not explicitly disclose wherein the cutting instrument is comprised of a super-elastic material.
However, Mannschedel, in the field of cutting instrument (Abstract), teaches wherein the cutting instrument (root canal drill bit 21, Fig. 8) is comprised of a super-elastic material ("FIG. 8 is a schematic diagram of a root canal instrument 80 according to a seventh embodiment of the invention. In this case, production of the core 7 does not start from a prefabricated conical rod which narrows towards the proximal end 10 as the core but rather starts from a basic plate produced using a core material such as nickel-titanium alloy and/or a plastics material.", Para. [0064]; "This electrically conductive material can be a nickel-titanium alloy, which comprises about 45% nickel by weight and about 55% titanium by weight and which is distinguished by its superelasticity, ...", Para. [0056]).
Therefore, it would have been obvious to one of ordinary skill in the art at the time of the invention to provide wherein the cutting instrument is comprised of a super-elastic material, as taught by Mannschedel, to the cutting instrument of Krieg, for the purpose of improving the flexibility of the cutting instrument.

Supplemental Box

In case the space **in any of the preceding boxes is not sufficient.**
Continuation of:

Regarding claim 49, Krieg discloses all the limitations of claim 36, but Krieg does not explicitly disclose wherein a portion of the cutting body at the free end comprises a first type of material and other portions of the cutting body comprise a second type of material that is different than the first type of material.
However, Mannschedel, in the field of cutting instrument (Abstract), teaches wherein a portion of the cutting body (body of root canal drill bit 21, Fig. 8) at the free end (lower end, Fig. 8) comprises a first type of material ("this root canal drill bit 21 gives rise to a root canal instrument 80, which has abrasive particles on its cutting edges 22 and 23.", Para. [0065]; "wherein the abrasive particles comprise ceramic particles, diamond particles, corundum particles, boron nitride particles, boron carbide particles, silicon particles, silicon nitride particles and/or silicon carbide particles.", Claim 4) and other portions of the cutting body (body of root canal drill bit 21, Fig. 8) comprise a second type of material ("In this case, production of the core 7 does not start from a prefabricated conical rod which narrows towards the proximal end 10 as the core but rather starts from a basic plate produced using a core material such as nickel-titanium alloy and/or a plastics material.", Para. [0064]) that is different than the first type of material (as in Paras. [0064] and Claim 4).
Therefore, it would have been obvious to one of ordinary skill in the art at the time of the invention to provide wherein a portion of the cutting body at the free end comprises a first type of material and other portions of the cutting body comprise a second type of material that is different than the first type of material, as taught by Mannschedel, to the cutting instrument of Krieg, for the purpose of improving the weight and cutting power of the cutting instrument.

Regarding claim 52, Krieg discloses all the limitations of claim 36, but Krieg does not explicitly disclose wherein the cutting portion is coated with one of the group consisting of diamond, amorphous diamond, diamond compact bits, and diamond-like carbon.
However, Mannschedel, in the field of cutting instrument (Abstract), teaches wherein the cutting portion (root canal drill bit 21, Fig. 8) is coated with one of the group consisting of diamond ("this root canal drill bit 21 gives rise to a root canal instrument 80, which has abrasive particles on its cutting edges 22 and 23.", Para. [0065]; "wherein the abrasive particles comprise ceramic particles, diamond particles", Claim 4), amorphous diamond, diamond compact bits, and diamond-like carbon.
Therefore, it would have been obvious to one of ordinary skill in the art at the time of the invention to provide wherein the cutting portion is coated with one of the group consisting of diamond, amorphous diamond, diamond compact bits, and diamond-like carbon, as taught by Mannschedel, to the cutting instrument of Krieg, for the purpose of improving the durability and cutting power of the cutting instrument.

Regarding claim 66, Krieg discloses all the limitations of claim 57, but Krieg does not explicitly disclose wherein a portion of the cutting body at the free end comprises a first type of material and other portions of the cutting body comprise a second type of material that is different than the first type of material.
However, Mannschedel, in the field of cutting instrument (Abstract), teaches wherein a portion of the cutting body (body of root canal drill bit 21, Fig. 8) at the free end (lower end, Fig. 8) comprises a first type of material ("this root canal drill bit 21 gives rise to a root canal instrument 80, which has abrasive particles on its cutting edges 22 and 23.", Para. [0065]; "wherein the abrasive particles comprise ceramic particles, diamond particles, corundum particles, boron nitride particles, boron carbide particles, silicon particles, silicon nitride particles and/or silicon carbide particles.", Claim 4) and other portions of the cutting body (body of root canal drill bit 21, Fig. 8) comprise a second type of material ("In this case, production of the core 7 does not start from a prefabricated conical rod which narrows towards the proximal end 10 as the core but rather starts from a basic plate produced using a core material such as nickel-titanium alloy and/or a plastics material.", Para. [0064]) that is different than the first type of material (as in Paras. [0064] and Claim 4).
Therefore, it would have been obvious to one of ordinary skill in the art at the time of the invention to provide wherein a portion of the cutting body at the free end comprises a first type of material and other portions of the cutting body comprise a second type of material that is different than the first type of material, as taught by Mannschedel, to the cutting instrument of Krieg, for the purpose of improving the weight and cutting power of the cutting instrument.

Claims 29,30,31,40-42 lack an inventive step under PCT Article 33(3) as being obvious over Krieg et al., hereinafter referred to as Krieg in view of Scianamblo.

Regarding claim 29, Krieg discloses all the limitations of claim 28, but Krieg does not explicitly disclose wherein the extending the cutting instrument comprises precessional motion of the cutting instrument.
However, Scianamblo, in the field of cutting instrument (Abstract), teaches wherein the extending the cutting instrument comprises precessional motion of the cutting instrument (Paras. [0019],[0091]-[0095] and Figs. 11A-11D; Thus, the waves produced by the cutting instrument will create a wobble or precessional motion.) .
Therefore, it would have been obvious to one of ordinary skill in the art at the time of the invention to provide wherein the extending the cutting instrument comprises precessional motion of the cutting instrument, as taught by Scianamblo, to the cutting instrument of Krieg, for the purpose of improving the clearing power of the cutting instrument.

Regarding claim 30, Krieg discloses all the limitations of claim 28, but Krieg does not explicitly disclose wherein rotating the cutting instrument includes causing the cutting instrument to form sinusoidal waves within the space.
However, Scianamblo, in the field of cutting instrument (Abstract), teaches wherein rotating the cutting includes causing the cutting instrument to form sinusoidal waves within the space (Paras. [0019],[0091]-[0095] and Figs. 11A-11D) .
Therefore, it would have been obvious to one of ordinary skill in the art at the time of the invention to provide wherein rotating the cutting instrument includes causing the cutting instrument to form sinusoidal waves within the space, as taught by Scianamblo, to the cutting instrument of Krieg, for the purpose of improving the clearing power of the cutting instrument.

Supplemental Box

In case the space in any of the preceding boxes is not sufficient.
Continuation of:

Regarding claim 31, Krieg discloses all the limitations of claim 28, but Krieg does not explicitly disclose wherein rotating the cutting instrument includes causing the cutting instrument to form helical waves within the space.
However, Scianamblo, in the field of cutting instrument (Abstract), teaches wherein rotating the cutting instrument includes causing the cutting instrument to form helical waves within the space (Paras. [0019],[0091]-[0095] and Figs. 11A-11D).
Therefore, it would have been obvious to one of ordinary skill in the art at the time of the invention to provide wherein rotating the cutting instrument includes causing the cutting instrument to form helical waves within the space, as taught by Scianamblo, to the cutting instrument of Krieg, for the purpose of improving the clearing power of the cutting instrument

Regarding claim 40, Krieg discloses all the limitations of claim 36, but Krieg does not explicitly disclose wherein the drill body is tapered from the shank to the free end such that the shank end has a larger cutting diameter than the free end.
However, Scianamblo, in the field of cutting instrument (Abstract), teaches wherein the drill body (Fig 6A) is tapered from the shank end (left end of Fig. 6A) to the free end (right end of Fig. 6A) such that the shank end (left end of Fig. 6A) has a larger cutting diameter than the free end (right end of Fig. 6A; as in Fig. 6A).
Therefore, it would have been obvious to one of ordinary skill in the art at the time of the invention to provide wherein the drill body is tapered from the shank to the free end such that the shank end has a larger cutting diameter than the free end, as taught by Scianamblo, to the cutting instrument of Krieg, for the purpose of improving the durability and cutting power of the cutting instrument.

Regarding claim 41, modified Krieg discloses all the limitations of claim 40, but Krieg does not explicitly disclose wherein the tapered body includes a first transverse cross-section and a second transverse cross-section, wherein the first transverse cross-section has a first geometry, and wherein the second transverse cross-section has a second geometry different from the first geometry.
However, Scianamblo, in the field of cutting instrument (Abstract), teaches wherein the tapered body (230, Fig. 2C) includes a first transverse cross-section (at 230, Fig. 2C) and a second transverse cross-section (at A; as in Fig. 2C), wherein the first transverse cross-section (at 230, Fig. 2C) has a first geometry (as in Fig. 2C), and wherein the second transverse cross-section (at A, Fig. 2C) has a second geometry different from the first geometry (as in Fig. 2C).
Therefore, it would have been obvious to one of ordinary skill in the art at the time of the invention to provide wherein the tapered body includes a first transverse cross-section and a second transverse cross-section, wherein the first transverse cross-section has a first geometry, and wherein the second transverse cross-section has a second geometry different from the first geometry, as taught by Scianamblo, to the cutting instrument of Krieg, for the purpose of improving the durability and cutting power of the cutting instrument.

Regarding claim 42, modified Krieg discloses all the limitations of claim 40, and Krieg discloses wherein the tapered body cuts along a dual axis, the dual axis comprising a first axis (axis at CP, Fig. 3) corresponding the central axis of rotation (as in Fig. 3) and a second axis (axis at center of mass, Fig. 2) corresponding to an offset mass path which rotates around the central axis (axis at CP; as in Figs. 1-3).

Claim 33 lacks an inventive step under PCT Article 33(3) as being obvious over Krieg et al., hereinafter referred to as Krieg in view of Yeung Wai Ping.

Regarding claim 33, Krieg discloses all the limitations of claim 28, but Krieg does not explicitly disclose wherein the driving the cutting instrument comprises reciprocating the cutting instrument rotationally about the axis of rotation.
However, Yeung Wai Ping, in the field of cutting instrument (Abstract), teaches wherein the driving the cutting instrument (drill bit 110, Fig. 7) comprises reciprocating the cutting instrument (110, Fig 7) rotationally about the axis of rotation ("Alternatively, the second longitudinal edge 134 of each one or both part cylindrical sections may also be a cutting edge in which case the drill bit will perform lateral cutting as it turns in either direction of rotation.", Para. [0041]).
Therefore, it would have been obvious to one of ordinary skill in the art at the time of the invention to provide wherein the driving the cutting instrument comprises reciprocating the cutting instrument rotationally about the axis of rotation, as taught by Yeung Wai Ping, to the cutting instrument of Krieg, for the purpose of improving the durability and cutting power of the cutting instrument.

Supplemental Box

In case the space in any of the preceding boxes is not sufficient.
Continuation of:

Claim 34 lacks an inventive step under PCT Article 33(3) as being obvious over Krieg et al., hereinafter referred to as Krieg in view of Ultimate Handyman, hereinafter referred to as Handyman.

Regarding claim 34, Krieg discloses all the limitations of claim 28, but Krieg does not explicitly disclose wherein the driving the cutting instrument comprises reciprocating the cutting instrument longitudinally along the axis of rotation.
However, Handyman, in the field of cutting instrument (Abstract), teaches wherein the driving the cutting instrument comprises reciprocating the cutting instrument longitudinally along the axis of rotation (as in 1:23-1:26 minutes shown in Figs. 2-5).
Therefore, it would have been obvious to one of ordinary skill in the art at the time of the invention to provide wherein the driving the cutting instrument comprises reciprocating the cutting instrument longitudinally along the axis of rotation, as taught by Handyman, to the cutting instrument of Krieg, for the purpose of improving the durability and cutting power of the cutting instrument.

Claim 35 lacks an inventive step under PCT Article 33(3) as being obvious over Krieg et al., hereinafter referred to as Krieg in view of Yeung Wai Ping and Ultimate Handyman, hereinafter referred to as Handyman.

Regarding claim 35, Krieg discloses all the limitations of claim 28, but Krieg does not explicitly disclose wherein the driving the cutting instrument comprises reciprocating the cutting instrument rotationally about the axis of rotation and longitudinally along the axis of rotation.
However, Yeung Wai Ping, in the field of cutting instrument (Abstract), teaches wherein the driving the cutting instrument (drill bit 110, Fig. 7) comprises reciprocating the cutting instrument (110, Fig. 7) rotationally about the axis of rotation ("Alternatively, the second longitudinal edge 134 of each one or both part cylindrical sections may also be a cutting edge in which case the drill bit will perform lateral cutting as it turns in either direction of rotation.", Para. [0041]).
Therefore, it would have been obvious to one of ordinary skill in the art at the time of the invention to provide wherein the driving the cutting instrument comprises reciprocating the cutting instrument rotationally about the axis of rotation, as taught by Yeung Wai Ping, to the cutting instrument of Krieg, for the purpose of improving the durability and cutting power of the cutting instrument.
In addition, Handyman, in the field of cutting instrument (Abstract), teaches wherein the driving the cutting instrument comprises reciprocating the cutting instrument longitudinally along the axis of rotation (as in 1:23-1:26 minutes shown in Figs. 2-5).
Therefore, it would have been obvious to one of ordinary skill in the art at the time of the invention to provide wherein the driving the cutting instrument comprises reciprocating the cutting instrument longitudinally along the axis of rotation, as taught by Handyman, to the cutting instrument of Krieg, for the purpose of improving the durability and cutting power of the cutting instrument.

Claim 44 lacks an inventive step under PCT Article 33(3) as being obvious over Krieg et al., hereinafter referred to as Krieg in view of McSpadden and further in view of Scianamblo.

Regarding claim 44, modified Krieg discloses all the limitations of claim 43, but Krieg does not explicitly disclose wherein the tapered body includes a first transverse cross-section and a second transverse cross-section, wherein the first transverse cross-section has a first geometry; and wherein the second transverse cross-section has a second geometry different from the first geometry.
However, Scianamblo, in the field of cutting instrument (Abstract), teaches wherein the tapered body (230, Fig. 2C) includes a first transverse cross-section (at 230, Fig. 2C) and a second transverse cross-section (at A; as in Fig. 2C), wherein the first transverse cross-section (at 230, Fig. 2C) has a first geometry (as in Fig. 2C), and wherein the second transverse cross-section (at A, Fig. 2C) has a second geometry different from the first geometry (as in Fig. 2C).
Therefore, it would have been obvious to one of ordinary skill in the art at the time of the invention to provide wherein the tapered body includes a first transverse cross-section and a second transverse cross-section, wherein the first transverse cross-section has a first geometry, and wherein the second transverse cross-section has a second geometry different from the first geometry, as taught by Scianamblo, to the cutting instrument of Krieg, for the purpose of improving the durability and cutting power of the cutting instrument.

Claims 55,56,71,72 lack an inventive step under PCT Article 33(3) as being obvious over Krieg et al., hereinafter referred to as Krieg in view of Miescher et al., hereinafter referred to as Miescher.

Regarding claim 55, Krieg discloses all the limitations of claim 54, but Krieg does not explicitly disclose wherein a pointed end of the chisel tip is offset from the axis of rotation.
However, Miescher, in the field of cutting instrument (Abstract), teaches wherein a pointed end of the chisel tip is offset from the axis of rotation (axis at A; as in Fig. 1).
Therefore, it would have been obvious to one of ordinary skill in the art at the time of the invention to provide wherein a pointed end of the chisel tip is offset from the axis of rotation, as taught by Miescher, to the cutting instrument of Krieg, for the purpose of improving the balance and cutting power of the cutting instrument.

Supplemental Box

In case the space in any of the preceding boxes is not sufficient.
Continuation of:

Regarding claim 56, modified Krieg discloses all the limitations of claim 55, but Krieg does not explicitly disclose wherein the chisel tip includes a first inclined plane and a second included plane with a different inclination than the first inclined plane.
However, Miescher, in the field of cutting instrument (Abstract), teaches wherein the chisel tip includes a first inclined plane and a second included plane with a different inclination than the first inclined plane (as in Fig. 1).
Therefore, it would have been obvious to one of ordinary skill in the art at the time of the invention to provide wherein the chisel tip includes a first inclined plane and a second included plane with a different inclination than the first inclined plane, as taught by Miescher, to the cutting instrument of Krieg, for the purpose of improving the balance and cutting power of the cutting instrument.

Regarding claim 71, Krieg discloses all the limitations of claim 70, but Krieg does not explicitly disclose wherein a pointed end of the chisel tip is offset from the axis of rotation.
However, Miescher, in the field of cutting instrument (Abstract), teaches wherein a pointed end of the chisel tip is offset from the axis of rotation (axis at A; as in Fig. 1).
Therefore, it would have been obvious to one of ordinary skill in the art at the time of the invention to provide wherein a pointed end of the chisel tip is offset from the axis of rotation, as taught by Miescher, to the cutting instrument of Krieg, for the purpose of improving the balance and cutting power of the cutting instrument.

Regarding claim 72, modified Krieg discloses all the limitations of claim 71, but Krieg does not explicitly disclose wherein the chisel tip includes a first inclined plane and a second included plane with a different inclination than the first inclined plane.
However, Miescher, in the field of cutting instrument (Abstract), teaches wherein the chisel tip includes a first inclined plane and a second included plane with a different inclination than the first inclined plane (as in Fig. 1).
Therefore, it would have been obvious to one of ordinary skill in the art at the time of the invention to provide wherein the chisel tip includes a first inclined plane and a second included plane with a different inclination than the first inclined plane, as taught by Miescher, to the cutting instrument of Krieg, for the purpose of improving the balance and cutting power of the cutting instrument.

Claims 2,24,61,62 meet the criteria set out in PCT Article 33(2)-(3), because the prior art does not teach or fairly suggest:

Regarding claim 2, the prior art of record, individually or in combination, does not teach or fairly suggest: The cutting instrument of claim 1, wherein a distance of the center of mass from the axis of rotation (axis at CP, Fig. 3) decreases linearly from the shank end to the free end.

Regarding claim 24, the prior art of record, individually or in combination, does not teach or fairly suggest: The cutting instrument of claim 1, having at least one longitudinal irrigation passage which passes through a shank portion of the cutting instrument and transverses a core or web of the drill exiting laterally and distally, wherein the passage is configured to allow flow of irrigation fluid to a lateral perimeter or tip of the cutting instrument.

Regarding claim 61, the prior art of record, individually or in combination, does not teach or fairly suggest: The cutting instrument of claim 60, wherein all centers of mass of each transverse cross-section are in a common plane.

Regarding claim 62, the prior art of record, individually or in combination, does not teach or fairly suggest: The cutting instrument of claim 57, wherein a first portion of the center of mass path is offset from the axis of rotation by a substantially constant distance, and wherein a second portion of the center of mass path is offset from the axis of rotation by a distance that decreases monotonically.

Claims 1-3,19-72 meet the criteria set out in PCT Article 33(4), and thus have industrial applicability because the subject matter claimed can be made or used in industry.

UNITED STATES PATENT AND TRADEMARK OFFICE

UNITED STATES DEPARTMENT OF COMMERCE
United States Patent and Trademark Office
Address: COMMISSIONER FOR PATENTS
P.O. Box 1450
Alexandria, Virginia 22313-1450
www.uspto.gov

NOTICE OF ALLOWANCE AND FEE(S) DUE

466 7590 09/11/2017
YOUNG & THOMPSON
209 Madison Street
Suite 500
Alexandria, VA 22314

EXAMINER
BERTRAM, ERIC D

ART UNIT	PAPER NUMBER
3766	

DATE MAILED: 09/11/2017

APPLICATION NO.	FILING DATE	FIRST NAMED INVENTOR	ATTORNEY DOCKET NO.	CONFIRMATION NO.
14/651,677	06/12/2015	Gilbert ROTA	5001-1489	4162

TITLE OF INVENTION: INSTRUMENT FOR DRILLING DENTAL ROOT CANALS

APPLN. TYPE	ENTITY STATUS	ISSUE FEE DUE	PUBLICATION FEE DUE	PREV. PAID ISSUE FEE	TOTAL FEE(S) DUE	DATE DUE
nonprovisional	UNDISCOUNTED	$960	$0	$0	$960	12/11/2017

THE APPLICATION IDENTIFIED ABOVE HAS BEEN EXAMINED AND IS ALLOWED FOR ISSUANCE AS A PATENT. PROSECUTION ON THE MERITS IS CLOSED. THIS NOTICE OF ALLOWANCE IS NOT A GRANT OF PATENT RIGHTS. THIS APPLICATION IS SUBJECT TO WITHDRAWAL FROM ISSUE AT THE INITIATIVE OF THE OFFICE OR UPON PETITION BY THE APPLICANT. SEE 37 CFR 1.313 AND MPEP 1308.

THE ISSUE FEE AND PUBLICATION FEE (IF REQUIRED) MUST BE PAID WITHIN THREE MONTHS FROM THE MAILING DATE OF THIS NOTICE OR THIS APPLICATION SHALL BE REGARDED AS ABANDONED. THIS STATUTORY PERIOD CANNOT BE EXTENDED. SEE 35 U.S.C. 151. THE ISSUE FEE DUE INDICATED ABOVE DOES NOT REFLECT A CREDIT FOR ANY PREVIOUSLY PAID ISSUE FEE IN THIS APPLICATION. IF AN ISSUE FEE HAS PREVIOUSLY BEEN PAID IN THIS APPLICATION (AS SHOWN ABOVE), THE RETURN OF PART B OF THIS FORM WILL BE CONSIDERED A REQUEST TO REAPPLY THE PREVIOUSLY PAID ISSUE FEE TOWARD THE ISSUE FEE NOW DUE.

HOW TO REPLY TO THIS NOTICE:

I. Review the ENTITY STATUS shown above. If the ENTITY STATUS is shown as SMALL or MICRO, verify whether entitlement to that entity status still applies.

If the ENTITY STATUS is the same as shown above, pay the TOTAL FEE(S) DUE shown above.

If the ENTITY STATUS is changed from that shown above, on PART B - FEE(S) TRANSMITTAL, complete section number 5 titled "Change in Entity Status (from status indicated above)".

For purposes of this notice, small entity fees are 1/2 the amount of undiscounted fees, and micro entity fees are 1/2 the amount of small entity fees.

II. PART B - FEE(S) TRANSMITTAL, or its equivalent, must be completed and returned to the United States Patent and Trademark Office (USPTO) with your ISSUE FEE and PUBLICATION FEE (if required). If you are charging the fee(s) to your deposit account, section "4b" of Part B - Fee(s) Transmittal should be completed and an extra copy of the form should be submitted. If an equivalent of Part B is filed, a request to reapply a previously paid issue fee must be clearly made, and delays in processing may occur due to the difficulty in recognizing the paper as an equivalent of Part B.

III. All communications regarding this application must give the application number. Please direct all communications prior to issuance to Mail Stop ISSUE FEE unless advised to the contrary.

IMPORTANT REMINDER: Utility patents issuing on applications filed on or after Dec. 12, 1980 may require payment of maintenance fees. It is patentee's responsibility to ensure timely payment of maintenance fees when due.

PTOL-85 (Rev. 02/11)

PART B - FEE(S) TRANSMITTAL

Complete and send this form, together with applicable fee(s), to: Mail **Mail Stop ISSUE FEE**
Commissioner for Patents
P.O. Box 1450
Alexandria, Virginia 22313-1450
or Fax (571)-273-2885

INSTRUCTIONS: This form should be used for transmitting the ISSUE FEE and PUBLICATION FEE (if required). Blocks 1 through 5 should be completed where appropriate. All further correspondence including the Patent, advance orders and notification of maintenance fees will be mailed to the current correspondence address as indicated unless corrected below or directed otherwise in Block 1, by (a) specifying a new correspondence address; and/or (b) indicating a separate "FEE ADDRESS" for maintenance fee notifications.

CURRENT CORRESPONDENCE ADDRESS (**Note:** Use Block 1 **for any change of address)**

466 7590 09/11/2017
YOUNG & THOMPSON
209 Madison Street
Suite 500
Alexandria, VA 22314

Note: A certificate of mailing can only be used for domestic mailings of the Fee(s) Transmittal. This certificate cannot be used for any other accompanying papers. Each additional paper, such as an assignment or formal drawing, must have its own certificate of mailing or transmission.

Certificate of Mailing or Transmission
I hereby certify that this Fee(s) Transmittal is being deposited with the United States Postal Service with sufficient postage for first class mail in an envelope addressed to the Mail Stop ISSUE FEE address above, or being facsimile transmitted to the USPTO (571) 273-2885, on the date indicated below.

(Depositor's name)
(Signature)
(Date)

APPLICATION NO.	FILING DATE	FIRST NAMED INVENTOR	ATTORNEY DOCKET NO.	CONFIRMATION NO.
14/651,677	06/12/2015	Gilbert ROTA	5001-1489	4162

TITLE OF INVENTION: INSTRUMENT FOR DRILLING DENTAL ROOT CANALS

APPLN. TYPE	ENTITY STATUS	ISSUE FEE DUE	PUBLICATION FEE DUE	PREV. PAID ISSUE FEE	TOTAL FEE(S) DUE	DATE DUE
nonprovisional	UNDISCOUNTED	$960	$0	$0	$960	12/11/2017

EXAMINER	ART UNIT	CLASS-SUBCLASS
BERTRAM, ERIC D	3766	433-102000

1. Change of correspondence address or indication of "Fee Address" (37 CFR 1.363).
❑ Change of correspondence address (or Change of Correspondence Address form PTO/SB/122) attached.
❑ "Fee Address" indication (or "Fee Address" Indication form PTO/SB/47; Rev 03-02 or more recent) attached. **Use of a Customer Number is required.**

2. For printing on the patent front page, list
(1) The names of up to 3 registered patent attorneys or agents OR, alternatively,
(2) The name of a single firm (having as a member a registered attorney or agent) and the names of up to 2 registered patent attorneys or agents. If no name is listed, no name will be printed.
1_____
2_____
3_____

3. ASSIGNEE NAME AND RESIDENCE DATA TO BE PRINTED ON THE PATENT (print or type)

PLEASE NOTE: Unless an assignee is identified below, no assignee data will appear on the patent. If an assignee is identified below, the document has been filed for recordation as set forth in 37 CFR 3.11. Completion of this form is NOT a substitute for filing an assignment.

(A) NAME OF ASSIGNEE (B) RESIDENCE: (CITY and STATE OR COUNTRY)

Please check the appropriate assignee category or categories (will not be printed on the patent) : ❑ Individual ❑ Corporation or other private group entity ❑ Government

4a. The following fee(s) are submitted:
❑ Issue Fee
❑ Publication Fee (No small entity discount permitted)
❑ Advance Order - # of Copies _____

4b. Payment of Fee(s): (**Please first reapply any previously paid issue fee shown above)**
❑ A check is enclosed.
❑ Payment by credit card. Form PTO-2038 is attached.
❑ The director is hereby authorized to charge the required fee(s), any deficiency, or credits any overpayment, to Deposit Account Number _____ (enclose an extra copy of this form).

5. **Change in Entity Status** (from status indicated above)
❑ Applicant certifying micro entity status. See 37 CFR 1.29 — NOTE: Absent a valid certification of Micro Entity Status (see forms PTO/SB/15A and 15B), issue fee payment in the micro entity amount will not be accepted at the risk of application abandonment.
❑ Applicant asserting small entity status. See 37 CFR 1.27 — NOTE: If the application was previously under micro entity status, checking this box will be taken to be a notification of loss of entitlement to micro entity status.
❑ Applicant changing to regular undiscounted fee status. — NOTE: Checking this box will be taken to be a notification of loss of entitlement to small or micro entity status, as applicable.

NOTE: This form must be signed in accordance with 37 CFR 1.31 and 1.33. See 37 CFR 1.4 for signature requirements and certifications.

Authorized Signature _____ Date _____

Typed or printed name _____ Registration No. _____

UNITED STATES DEPARTMENT OF COMMERCE
United States Patent and Trademark Office
Address: COMMISSIONER FOR PATENTS
P.O. Box 1450
Alexandria, Virginia 22313-1450
www.uspto.gov

APPLICATION NO.	FILING DATE	FIRST NAMED INVENTOR	ATTORNEY DOCKET NO.	CONFIRMATION NO.
14/651,677	06/12/2015	Gilbert ROTA	5001-1489	4162

466 7590 09/11/2017
YOUNG & THOMPSON
209 Madison Street
Suite 500
Alexandria, VA 22314

EXAMINER
BERTRAM, ERIC D

ART UNIT	PAPER NUMBER
3766	

DATE MAILED: 09/11/2017

Determination of Patent Term Adjustment under 35 U.S.C. 154 (b)
(Applications filed on or after May 29, 2000)

The Office has discontinued providing a Patent Term Adjustment (PTA) calculation with the Notice of Allowance.

Section 1(h)(2) of the AIA Technical Corrections Act amended 35 U.S.C. 154(b)(3)(B)(i) to eliminate the requirement that the Office provide a patent term adjustment determination with the notice of allowance. See Revisions to Patent Term Adjustment, 78 Fed. Reg. 19416, 19417 (Apr. 1, 2013). Therefore, the Office is no longer providing an initial patent term adjustment determination with the notice of allowance. The Office will continue to provide a patent term adjustment determination with the Issue Notification Letter that is mailed to applicant approximately three weeks prior to the issue date of the patent, and will include the patent term adjustment on the patent. Any request for reconsideration of the patent term adjustment determination (or reinstatement of patent term adjustment) should follow the process outlined in 37 CFR 1.705.

Any questions regarding the Patent Term Extension or Adjustment determination should be directed to the Office of Patent Legal Administration at (571)-272-7702. Questions relating to issue and publication fee payments should be directed to the Customer Service Center of the Office of Patent Publication at 1-(888)-786-0101 or (571)-272-4200.

OMB Clearance and PRA Burden Statement for PTOL-85 Part B

The Paperwork Reduction Act (PRA) of 1995 requires Federal agencies to obtain Office of Management and Budget approval before requesting most types of information from the public. When OMB approves an agency request to collect information from the public, OMB (i) provides a valid OMB Control Number and expiration date for the agency to display on the instrument that will be used to collect the information and (ii) requires the agency to inform the public about the OMB Control Number's legal significance in accordance with 5 CFR 1320.5(b).

The information collected by PTOL-85 Part B is required by 37 CFR 1.311. The information is required to obtain or retain a benefit by the public which is to file (and by the USPTO to process) an application. Confidentiality is governed by 35 U.S.C. 122 and 37 CFR 1.14. This collection is estimated to take 12 minutes to complete, including gathering, preparing, and submitting the completed application form to the USPTO. Time will vary depending upon the individual case. Any comments on the amount of time you require to complete this form and/or suggestions for reducing this burden, should be sent to the Chief Information Officer, U.S. Patent and Trademark Office, U.S. Department of Commerce, P.O. Box 1450, Alexandria, Virginia 22313-1450. DO NOT SEND FEES OR COMPLETED FORMS TO THIS ADDRESS. SEND TO: Commissioner for Patents, P.O. Box 1450, Alexandria, Virginia 22313-1450. Under the Paperwork Reduction Act of 1995, no persons are required to respond to a collection of information unless it displays a valid OMB control number.

Privacy Act Statement

The Privacy Act of 1974 (P.L. 93-579) requires that you be given certain information in connection with your submission of the attached form related to a patent application or patent. Accordingly, pursuant to the requirements of the Act, please be advised that: (1) the general authority for the collection of this information is 35 U.S.C. 2(b)(2); (2) furnishing of the information solicited is voluntary; and (3) the principal purpose for which the information is used by the U.S. Patent and Trademark Office is to process and/or examine your submission related to a patent application or patent. If you do not furnish the requested information, the U.S. Patent and Trademark Office may not be able to process and/or examine your submission, which may result in termination of proceedings or abandonment of the application or expiration of the patent.

The information provided by you in this form will be subject to the following routine uses:

1. The information on this form will be treated confidentially to the extent allowed under the Freedom of Information Act (5 U.S.C. 552) and the Privacy Act (5 U.S.C 552a). Records from this system of records may be disclosed to the Department of Justice to determine whether disclosure of these records is required by the Freedom of Information Act.
2. A record from this system of records may be disclosed, as a routine use, in the course of presenting evidence to a court, magistrate, or administrative tribunal, including disclosures to opposing counsel in the course of settlement negotiations.
3. A record in this system of records may be disclosed, as a routine use, to a Member of Congress submitting a request involving an individual, to whom the record pertains, when the individual has requested assistance from the Member with respect to the subject matter of the record.
4. A record in this system of records may be disclosed, as a routine use, to a contractor of the Agency having need for the information in order to perform a contract. Recipients of information shall be required to comply with the requirements of the Privacy Act of 1974, as amended, pursuant to 5 U.S.C. 552a(m).
5. A record related to an International Application filed under the Patent Cooperation Treaty in this system of records may be disclosed, as a routine use, to the International Bureau of the World Intellectual Property Organization, pursuant to the Patent Cooperation Treaty.
6. A record in this system of records may be disclosed, as a routine use, to another federal agency for purposes of National Security review (35 U.S.C. 181) and for review pursuant to the Atomic Energy Act (42 U.S.C. 218(c)).
7. A record from this system of records may be disclosed, as a routine use, to the Administrator, General Services, or his/her designee, during an inspection of records conducted by GSA as part of that agency's responsibility to recommend improvements in records management practices and programs, under authority of 44 U.S.C. 2904 and 2906. Such disclosure shall be made in accordance with the GSA regulations governing inspection of records for this purpose, and any other relevant (i.e., GSA or Commerce) directive. Such disclosure shall not be used to make determinations about individuals.
8. A record from this system of records may be disclosed, as a routine use, to the public after either publication of the application pursuant to 35 U.S.C. 122(b) or issuance of a patent pursuant to 35 U.S.C. 151. Further, a record may be disclosed, subject to the limitations of 37 CFR 1.14, as a routine use, to the public if the record was filed in an application which became abandoned or in which the proceedings were terminated and which application is referenced by either a published application, an application open to public inspection or an issued patent.
9. A record from this system of records may be disclosed, as a routine use, to a Federal, State, or local law enforcement agency, if the USPTO becomes aware of a violation or potential violation of law or regulation.

Notice of Allowability	Application No. 14/651,677	Applicant(s) ROTA ET AL.	
	Examiner Eric D. Bertram	Art Unit 3766	AIA (First Inventor to File) Status No

-- The MAILING DATE of this communication appears on the cover sheet with the correspondence address--

All claims being allowable, PROSECUTION ON THE MERITS IS (OR REMAINS) CLOSED in this application. If not included herewith (or previously mailed), a Notice of Allowance (PTOL-85) or other appropriate communication will be mailed in due course. **THIS NOTICE OF ALLOWABILITY IS NOT A GRANT OF PATENT RIGHTS.** This application is subject to withdrawal from issue at the initiative of the Office or upon petition by the applicant. See 37 CFR 1.313 and MPEP 1308.

1. ☒ This communication is responsive to *an RCE filed on 8/25/2017*.
   ☐ A declaration(s)/affidavit(s) under **37 CFR 1.130(b)** was/were filed on_____.
2. ☐ An election was made by the applicant in response to a restriction requirement set forth during the interview on _____; the restriction requirement and election have been incorporated into this action.
3. ☒ The allowed claim(s) is/are *1-10*. As a result of the allowed claim(s), you may be eligible to benefit from the **Patent Prosecution Highway** program at a participating intellectual property office for the corresponding application. For more information, please see http://www.uspto.gov/patents/init_events/pph/index.jsp or send an inquiry to PPHfeedback@uspto.gov.
4. ☒ Acknowledgment is made of a claim for foreign priority under 35 U.S.C. § 119(a)-(d) or (f).

   Certified copies:

   a) ☒ All b) ☐ Some *c) ☐ None of the:
   1. ☐ Certified copies of the priority documents have been received.
   2. ☐ Certified copies of the priority documents have been received in Application No. _____ .
   3. ☒ Copies of the certified copies of the priority documents have been received in this national stage application from the International Bureau (PCT Rule 17.2(a)).

   * Certified copies not received: _____.

Applicant has THREE MONTHS FROM THE "MAILING DATE" of this communication to file a reply complying with the requirements noted below. Failure to timely comply will result in ABANDONMENT of this application.
THIS THREE-MONTH PERIOD IS NOT EXTENDABLE.

5. ☐ CORRECTED DRAWINGS (as "replacement sheets") must be submitted.
   ☐ including changes required by the attached Examiner's Amendment / Comment or in the Office action of Paper No./Mail Date _____.

   Identifying indicia such as the application number (see 37 CFR 1.84(c)) should be written on the drawings in the front (not the back) of each sheet. Replacement sheet(s) should be labeled as such in the header according to 37 CFR 1.121(d).
6. ☐ DEPOSIT OF and/or INFORMATION about the deposit of BIOLOGICAL MATERIAL must be submitted. Note the attached Examiner's comment regarding REQUIREMENT FOR THE DEPOSIT OF BIOLOGICAL MATERIAL.

Attachment(s)

1. ☐ Notice of References Cited (PTO-892)
2. ☒ Information Disclosure Statements (PTO/SB/08), Paper No./Mail Date 8/25/2017
3. ☐ Examiner's Comment Regarding Requirement for Deposit of Biological Material
4. ☐ Interview Summary (PTO-413), Paper No./Mail Date _____ .
5. ☐ Examiner's Amendment/Comment
6. ☐ Examiner's Statement of Reasons for Allowance
7. ☐ Other _____.

/Eric D. Bertram/
Primary Examiner, Art Unit 3766

Doc code: IDS
Doc description: Information Disclosure Statement (IDS) Filed

PTO/SB/08a (03-15)
Approved for use through 07/31/2016. OMB 0651-0031
U.S. Patent and Trademark Office; U.S. DEPARTMENT OF COMMERCE

INFORMATION DISCLOSURE STATEMENT BY APPLICANT

(Not for submission under 37 CFR 1.99)

Application Number	14651677
Filing Date	2015-06-12
First Named Inventor	Gilbert ROTA
Art Unit	3766
Examiner Name	Eric D. BERTRAM
Attorney Docket Number	5001-1489

U.S.PATENTS Remove

Examiner Initial*	Cite No	Patent Number	Kind Code[1]	Issue Date	Name of Patentee or Applicant of cited Document	Pages,Columns,Lines where Relevant Passages or Relevant Figures Appear
	1	5921775	A	1999-07-13	BUCHANAN	cited in EP Office Action
	2	6106296	A	2000-08-22	JOHNSON	cited in EP Office Action
	3	5836764	A	1998-11-17	BUCHANAN	cited in EP Office Action
	4	5503554	A	1996-04-02	SCHOEFFEL	cited in EP Office Action
	5	5938440	A	1999-08-17	MCSPADDEN	cited in EP Office Action
	6	4842451	A	1989-06-27	DUGGER	cited in International Search Report
	7	6702579	B1	2004-03-09	HOPPE ET AL.	cited in EP Office Action
	8	5775904	A	1998-07-07	RIITANO	cited in European Search Report

If you wish to add additional U.S. Patent citation information please click the Add button. Add

ALL REFERENCES CONSIDERED EXCEPT WHERE LINED THROUGH. /EDB/

INFORMATION DISCLOSURE STATEMENT BY APPLICANT

(Not for submission under 37 CFR 1.99)

Application Number	14651677
Filing Date	2015-06-12
First Named Inventor	Gilbert ROTA
Art Unit	3766
Examiner Name	Eric D. BERTRAM
Attorney Docket Number	5001-1489

U.S.PATENT APPLICATION PUBLICATIONS Remove

Examiner Initial*	Cite No	Publication Number	Kind Code[1]	Publication Date	Name of Patentee or Applicant of cited Document	Pages,Columns,Lines where Relevant Passages or Relevant Figures Appear
	1	20040219485	A1	2004-11-04	SCIANAMBLO	cited in EP Office Action
	2	20060228669	A1	2006-10-12	SCIANAMBLO	cited in International Search Report
	3	20120034048	A1	2012-02-09	KRIEG ET AL.	cited in International Search Report
	4	20040023186	A1	2007-01-18	MCSPADDEN	cited in International Search Report
	5	20070015107	A1	2007-01-18	MANNSCHEDEL ET AL.	cited in International Search Report
	6	20040219485	A1	2004-11-04	SCIANAMBLO	cited in EP Office Action
	7	20060111724	A1	2006-05-25	YEUNG	cited in International Search Report
	8					

If you wish to add additional U.S. Published Application citation information please click the Add button. Add

FOREIGN PATENT DOCUMENTS Remove

Examiner Initial*	Cite No	Foreign Document Number[3]	Country Code[2] i	Kind Code[4]	Publication Date	Name of Patentee or Applicant of cited Document	Pages,Columns,Lines where Relevant Passages or Relevant Figures Appear	T[5]

INFORMATION DISCLOSURE STATEMENT BY APPLICANT

(Not for submission under 37 CFR 1.99)

Application Number	14651677
Filing Date	2015-06-12
First Named Inventor	Gilbert ROTA
Art Unit	3766
Examiner Name	Eric D. BERTRAM
Attorney Docket Number	5001-1489

	1	0120542	EP	A1	1984-10-03		cited in EP OA; with English Abstract	
	2	0987076	EP	A2	2000-03-22		with English Abstract	
	3	1184004	EP	A2	2002-03-06			
	4	1213074	EP	A2	2002-06-12		with English Abstract	
	5	1340573	EP	A1	2003-09-03		with English Abstract	
	6	2798277	FR	A1	2001-03-16		with English Abstract	
	7	2854054	FR	A1	2004-10-29		with English Abstract	
	8	2935260	FR	A1	2010-03-05		with English Abstract	
	9	11-019812	JP	A	1999-01-26		with Computer Generated English Translation	
	10	52-156494	JP	A	1977-12-26		with English Abstract	
	11	57-127608	JP	A	1982-08-07		with English Abstract	

ALL REFERENCES CONSIDERED EXCEPT WHERE LINED THROUGH. /EDB/

INFORMATION DISCLOSURE STATEMENT BY APPLICANT

(Not for submission under 37 CFR 1.99)

Application Number	14651677
Filing Date	2015-06-12
First Named Inventor	Gilbert ROTA
Art Unit	3766
Examiner Name	Eric D. BERTRAM
Attorney Docket Number	5001-1489

	12	62-241606	JP	A	1987-10-22		with English Abstract	
	13	2002-144122	JP	A	2002-05-21		with English Abstract	
	14	2002-205213	JP	A	2002-07-23		with English Abstract	
	15	2009-108382	JP	A	2009-05-21		with Computer Generated English Translation	
	16	H06-320323	JP	A	1994-11-22		with English Abstract	
	17	WO2009001681	JP	A1	2010-08-26		with English Abstract	
	18	2014/118587	WO	A1	2014-08-07		cited in European Search Report	
	19	637207	SU	A1	1978-12-15			
	20	01/19279	WO	A1	2001-03-22		with English Abstract	
	21	02/065938	WO	A1	2002-08-29		with English Abstract	
	22	2004/098438	WO	A1	2004-11-18			

ALL REFERENCES CONSIDERED EXCEPT WHERE LINED THROUGH. /EDB/

INFORMATION DISCLOSURE STATEMENT BY APPLICANT

(Not for submission under 37 CFR 1.99)

Application Number	14651677
Filing Date	2015-06-12
First Named Inventor	Gilbert ROTA
Art Unit	3766
Examiner Name	Eric D. BERTRAM
Attorney Docket Number	5001-1489

If you wish to add additional Foreign Patent Document citation information please click the Add button Add

NON-PATENT LITERATURE DOCUMENTS Remove

Examiner Initials*	Cite No	Include name of the author (in CAPITAL LETTERS), title of the article (when appropriate), title of the item (book, magazine, journal, serial, symposium, catalog, etc), date, pages(s), volume-issue number(s), publisher, city and/or country where published.	T[5]
	1	European Office Action issued in Application No. 06007527.2, dated June 17, 2009	
	2	European Office Action issued in Application No. 04750878.3, dated June 5, 2007	
	3	European Office Action issued in Application No. 04751290.0, dated June 5, 2007	
	4	International Search Report and Written Opinion issued in Application No. PCT/US2014/051916, dated February 4, 2015	
	5	International Search Report and Written Opinion issued in Application No. PCT/US2014/051909, dated December 22, 2014	
	6	European Office Action issued in Application No. 06007527.2, dated July 6, 2004	
	7	"ProTaper Next: A Shift Up In Performance," ProTaper Next Rotary Files, January 2013, 1 pages	
	8	European Search Report issued in Application No. 14838210.4, dated March 8, 2014	
	9	"Drilling Through Walls," Ultimate Handyman, YouTube, <URL: https://www.youtube.com/watch?v=fpFUxlcH2Lg>, September 23, 2011, retrieved from the internet August 24, 2017, 3 pages	

If you wish to add additional non-patent literature document citation information please click the Add button Add

INFORMATION DISCLOSURE STATEMENT BY APPLICANT

(Not for submission under 37 CFR 1.99)

Application Number	14651677
Filing Date	2015-06-12
First Named Inventor	Gilbert ROTA
Art Unit	3766
Examiner Name	Eric D. BERTRAM
Attorney Docket Number	5001-1489

EXAMINER SIGNATURE

Examiner Signature	/Eric D. Bertram/	Date Considered	08/31/2017

*EXAMINER: Initial if reference considered, whether or not citation is in conformance with MPEP 609. Draw line through a citation if not in conformance and not considered. Include copy of this form with next communication to applicant.

[1] See Kind Codes of USPTO Patent Documents at www.USPTO.GOV or MPEP 901.04. [2] Enter office that issued the document, by the two-letter code (WIPO Standard ST.3). [3] For Japanese patent documents, the indication of the year of the reign of the Emperor must precede the serial number of the patent document. [4] Kind of document by the appropriate symbols as indicated on the document under WIPO Standard ST.16 if possible. [5] Applicant is to place a check mark here if English language translation is attached.

ALL REFERENCES CONSIDERED EXCEPT WHERE LINED THROUGH. /EDB/

INFORMATION DISCLOSURE STATEMENT BY APPLICANT

(Not for submission under 37 CFR 1.99)

Application Number	14651677
Filing Date	2015-06-12
First Named Inventor	Gilbert ROTA
Art Unit	3766
Examiner Name	Eric D. BERTRAM
Attorney Docket Number	5001-1489

CERTIFICATION STATEMENT

Please see 37 CFR 1.97 and 1.98 to make the appropriate selection(s):

That each item of information contained in the information disclosure statement was first cited in any communication from a foreign patent office in a counterpart foreign application not more than three months prior to the filing of the information disclosure statement. See 37 CFR 1.97(e)(1).

OR

☐ That no item of information contained in the information disclosure statement was cited in a communication from a foreign patent office in a counterpart foreign application, and, to the knowledge of the person signing the certification after making reasonable inquiry, no item of information contained in the information disclosure statement was known to any individual designated in 37 CFR 1.56(c) more than three months prior to the filing of the information disclosure statement. See 37 CFR 1.97(e)(2).

See attached certification statement.

The fee set forth in 37 CFR 1.17 (p) has been submitted herewith.

☒ A certification statement is not submitted herewith.

SIGNATURE

A signature of the applicant or representative is required in accordance with CFR 1.33, 10.18. Please see CFR 1.4(d) for the form of the signature.

Signature	/Eric Jensen/	Date (YYYY-MM-DD)	2017-08-25
Name/Print	Eric Jensen	Registration Number	37855

This collection of information is required by 37 CFR 1.97 and 1.98. The information is required to obtain or retain a benefit by the public which is to file (and by the USPTO to process) an application. Confidentiality is governed by 35 U.S.C. 122 and 37 CFR 1.14. This collection is estimated to take 1 hour to complete, including gathering, preparing and submitting the completed application form to the USPTO. Time will vary depending upon the individual case. Any comments on the amount of time you require to complete this form and/or suggestions for reducing this burden, should be sent to the Chief Information Officer, U.S. Patent and Trademark Office, U.S. Department of Commerce, P.O. Box 1450, Alexandria, VA 22313-1450. DO NOT SEND FEES OR COMPLETED FORMS TO THIS ADDRESS. **SEND TO: Commissioner for Patents, P.O. Box 1450, Alexandria, VA 22313-1450.**

Privacy Act Statement

The Privacy Act of 1974 (P.L. 93-579) requires that you be given certain information in connection with your submission of the attached form related to a patent application or patent. Accordingly, pursuant to the requirements of the Act, please be advised that: (1) the general authority for the collection of this information is 35 U.S.C. 2(b)(2); (2) furnishing of the information solicited is voluntary; and (3) the principal purpose for which the information is used by the U.S. Patent and Trademark Office is to process and/or examine your submission related to a patent application or patent. If you do not furnish the requested information, the U.S. Patent and Trademark Office may not be able to process and/or examine your submission, which may result in termination of proceedings or abandonment of the application or expiration of the patent.

The information provided by you in this form will be subject to the following routine uses:

1. The information on this form will be treated confidentially to the extent allowed under the Freedom of Information Act (5 U.S.C. 552) and the Privacy Act (5 U.S.C. 552a). Records from this system of records may be disclosed to the Department of Justice to determine whether the Freedom of Information Act requires disclosure of these record s.

2. A record from this system of records may be disclosed, as a routine use, in the course of presenting evidence to a court, magistrate, or administrative tribunal, including disclosures to opposing counsel in the course of settlement negotiations.

3. A record in this system of records may be disclosed, as a routine use, to a Member of Congress submitting a request involving an individual, to whom the record pertains, when the individual has requested assistance from the Member with respect to the subject matter of the record.

4. A record in this system of records may be disclosed, as a routine use, to a contractor of the Agency having need for the information in order to perform a contract. Recipients of information shall be required to comply with the requirements of the Privacy Act of 1974, as amended, pursuant to 5 U.S.C. 552a(m).

5. A record related to an International Application filed under the Patent Cooperation Treaty in this system of records may be disclosed, as a routine use, to the International Bureau of the World Intellectual Property Organization, pursuant to the Patent Cooperation Treaty.

6. A record in this system of records may be disclosed, as a routine use, to another federal agency for purposes of National Security review (35 U.S.C. 181) and for review pursuant to the Atomic Energy Act (42 U.S.C. 218(c)).

7. A record from this system of records may be disclosed, as a routine use, to the Administrator, General Services, or his/her designee, during an inspection of records conducted by GSA as part of that agency's responsibility to recommend improvements in records management practices and programs, under authority of 44 U.S.C. 2904 and 2906. Such disclosure shall be made in accordance with the GSA regulations governing inspection of records for this purpose, and any other relevant (i.e., GSA or Commerce) directive. Such disclosure shall not be used to make determinations about individuals.

8. A record from this system of records may be disclosed, as a routine use, to the public after either publication of the application pursuant to 35 U.S.C. 122(b) or issuance of a patent pursuant to 35 U.S.C. 151. Further, a record may be disclosed, subject to the limitations of 37 CFR 1.14, as a routine use, to the public if the record was filed in an application which became abandoned or in which the proceedings were terminated and which application is referenced by either a published application, an application open to public inspections or an issued patent.

9. A record from this system of records may be disclosed, as a routine use, to a Federal, State, or local law enforcement agency, if the USPTO becomes aware of a violation or potential violation of law or regulation.

Search Notes	Application/Control No.	Applicant(s)/Patent Under Reexamination
	14651677	ROTA ET AL.
	Examiner	**Art Unit**
	ERIC D BERTRAM	3766

CPC- SEARCHED

Symbol	Date	Examiner
A61C 5/023	8/5/2016	EDB
A61C 5/42	5/23/2017	EDB

CPC COMBINATION SETS - SEARCHED

Symbol	Date	Examiner

US CLASSIFICATION SEARCHED

Class	Subclass	Date	Examiner

* See search history printout included with this form or the SEARCH NOTES box below to determine the scope of the search.

SEARCH NOTES

Search Notes	Date	Examiner
EAST text search	8/5/16	EDB
Inventor search	8/5/16	EDB
EAST text search	1/24/17	EDB
EAST text search	5/23/2017	EDB

INTERFERENCE SEARCH

US Class/ CPC Symbol	US Subclass / CPC Group	Date	Examiner
USPAT and PGPUB	text search - see attached	5/23/2017	EDB
USPAT and PGPUB	text search - see attached	8/31/2017	EDB

EAST Search History

EAST Search History (Prior Art)

Ref #	Hits	Search Query	DBs	Default Operator	Plurals	Time Stamp
L1	17	(US-02009001681-$ | US-04750878-$ | US-04751290-$ | US-06007527-$ | US-1184004-$ | US-1213074-$ | US-1340573-$ | US-14651677-$ | US-14838210-$ | US-1842451-$ | US-20040023186-$ | US-20040219485-$ | US-20060111724-$ | US-20060228669-$ | US-20070015107-$ | US-20120034048-$ | US-5106296-$ | US-5503554-$ | US-5702579-$ | US-5775904-$ | US-5836764-$ | US-5921775-$ | US-5938440-$).DID.	US-PGPUB; USPAT; EPO; JPO	OR	OFF	2017/08/31 21:01
S1	8	rota-gilbert$.in. vallotton-paul$.in.	US-PGPUB; USPAT; EPO; JPO	OR	OFF	2016/08/05 12:08
S2	1	S1 and mass.clm.	US-PGPUB; USPAT; EPO; JPO	OR	OFF	2016/08/05 12:08
S3	4	(("7955078") or ("20060265858") or ("20050100859") or ("20050282109")).PN.	US-PGPUB; USPAT; USOCR; EPO; JPO	OR	OFF	2016/08/05 12:09
S4	546	a61c5/023.cpc.	US-PGPUB; USPAT; EPO; JPO	OR	OFF	2016/08/05 12:13
S5	23	S4 and (centre or center) with mass	US-PGPUB; USPAT; EPO; JPO	OR	ON	2016/08/05 12:37
S6	14	S4 and (centre or center) with mass same (alternat$4 or vary$4 or chang$4 or offset$4)	US-PGPUB; USPAT; EPO; JPO	OR	ON	2016/08/05 12:38
S7	559	a61c5/023.cpc.	US-PGPUB; USPAT; EPO; JPO	OR	OFF	2017/01/24 09:49
S8	23	S7 and cent$2 near2 mass	US-PGPUB; USPAT; EPO;	OR	OFF	2017/01/24 09:49

			JPO			
S9	23	S7 and cent$2 near2 mass same axis with rotation	US-PGPUB; USPAT; EPO; JPO	OR	OFF	2017/01/24 09:49
S10	102	(rat with tail with file) or (barbed with broach)	US-PGPUB; USPAT; EPO; JPO	OR	OFF	2017/01/24 09:57
S11	93	(rat with tail with file) or (barbed with broach) and root with canal	US-PGPUB; USPAT; EPO; JPO	OR	OFF	2017/01/24 09:57
S12	2	(("20120219927") or ("20120093944")).PN.	US-PGPUB; USPAT; USOCR; EPO; JPO	OR	OFF	2017/05/23 12:40
S13	2	(("7731498") or ("8454361")).PN.	US-PGPUB; USPAT; USOCR; EPO; JPO	OR	OFF	2017/05/23 12:42
S14	57	("0251598" | "20040023186" | "20040131993" | "20040185414" | "20040219484" | "20040219485" | "20050266375" | "20050272004" | "20060216668" | "20070184406" | "20110217673" | "4044468" | "4260379" | "4353698" | "4457710" | "4536159" | "4538989" | "4824370" | "4871312" | "4889487" | "4934934" | "4992048" | "5035617" | "5236357" | "5464362" | "5503554" | "5605460" | "5676541" | "5692902" | "5735689" | "5775904" | "5836764" | "5842862" | "5882198" | "5897316" | "5902106" | "5921775" | "5938440" | "6074209" | "6106296" | "6206695" | "6267592" | "6299445" | "6315558" | "6419488" | "6428317" | "6702579" | "6929078" | "7125252").PN. OR ("7731498" | "8454361").URPN.	US-PGPUB; USPAT; USOCR	OR	OFF	2017/05/23 12:43
S15	50	S14 and @ad< "20130130"	US-PGPUB; USPAT; USOCR	OR	OFF	2017/05/23 12:43
S16	52	S14 and @ad< "20130607"	US-PGPUB; USPAT; USOCR	OR	OFF	2017/05/23 12:43
S17	2	S16 and offset with axis	US-PGPUB; USPAT; USOCR	OR	OFF	2017/05/23 12:48
S18	97	(dental or tooth or teeth or root with canal)	US-	OR	ON	2017/05/23

		and ((rat with tail with file) or (barbed with broach) or drill or file) and offset with axis same center with mass	PGPUB; USPAT; EPO; JPO			12:57
S19	72	S18 and @ad< "20130607"	US-PGPUB; USPAT; USOCR	OR	OFF	2017/05/23 12:59
S20	1	("7955078").PN.	US-PGPUB; USPAT; USOCR; EPO; JPO	OR	OFF	2017/05/23 12:59
S21	22	(dental or tooth or teeth or root with canal) and ((rat with tail with file) or (barbed with broach) or drill or file and instrument) same offset with axis same center with mass	US-PGPUB; USPAT; EPO; JPO	OR	ON	2017/05/23 12:59
S22	38	(dental or tooth or teeth or root with canal) and ((rat with tail with file) or (barbed with broach) or drill or file or instrument) same offset with axis same center with mass	US-PGPUB; USPAT; EPO; JPO	OR	ON	2017/05/23 13:00
S23	23	S22 and @ad< "20130607"	US-PGPUB; USPAT; USOCR	OR	OFF	2017/05/23 13:00
S24	615	a61c5/42.cpc.	US-PGPUB; USPAT; EPO; JPO	OR	OFF	2017/05/23 13:13

EAST Search History (Interference)

Ref #	Hits	Search Query	DBs	Default Operator	Plurals	Time Stamp
L2	4	(taper$4 same edge same envelope same axis same cut$4 same center same mass).clm.	US-PGPUB; USPAT	OR	ON	2017/08/31 21:08
L3	1	((dental or root with canal or tooth or teeth) same taper$4 same edge same envelope same axis same center same mass).clm.	US-PGPUB; USPAT	OR	ON	2017/08/31 21:08
S25	4	(taper$4 same edge same envelope same axis same cut$4 same center same mass).clm.	US-PGPUB; USPAT	OR	ON	2017/05/23 13:03
S26	1	((dental or root with canal or tooth or teeth) same taper$4 same edge same envelope same axis same center same mass).clm.	US-PGPUB; USPAT	OR	ON	2017/05/23 13:04

8/31/2017 9:09:05 PM
C:\Users\ebertram\Documents\EAST\Workspaces\14651677.wsp

Issue Classification	Application/Control No.	Applicant(s)/Patent Under Reexamination
	14651677	ROTA ET AL.
	Examiner	**Art Unit**
	ERIC D BERTRAM	3766

CPC

Symbol					Type	Version
A61C		5	/	023	F	2013-01-01
A61C		5	/	42	I	2017-02-01
			/			
			/			
			/			
			/			
			/			
			/			
			/			
			/			
			/			
			/			
			/			
			/			
			/			

CPC Combination Sets

Symbol					Type	Set	Ranking	Version
			/					
			/					

NONE (Assistant Examiner)	(Date)	**Total Claims Allowed:** 10	
/ERIC D. BERTRAM/ Primary Examiner, Art Unit 3766 (Primary Examiner)	08/31/2017 (Date)	O.G. Print Claim(s) 1	O.G. Print Figure 8

Issue Classification	Application/Control No.	Applicant(s)/Patent Under Reexamination
	14651677	ROTA ET AL.
	Examiner	**Art Unit**
	ERIC D BERTRAM	3766

US ORIGINAL CLASSIFICATION		INTERNATIONAL CLASSIFICATION									
CLASS	SUBCLASS	CLAIMED					NON-CLAIMED				
		A	6	1	C	5 / 00 (2006.01.01)					
CROSS REFERENCE(S)											
CLASS	SUBCLASS (ONE SUBCLASS PER BLOCK)										

NONE (Assistant Examiner) (Date)		Total Claims Allowed: 10	
/ERIC D. BERTRAM/ Primary Examiner, Art Unit 3766 (Primary Examiner) (Date)	08/31/2017	O.G. Print Claim(s) 1	O.G. Print Figure 8

Issue Classification	Application/Control No.	Applicant(s)/Patent Under Reexamination
	14651677	ROTA ET AL.
	Examiner	**Art Unit**
	ERIC D BERTRAM	3766

☐ Claims renumbered in the same order as presented by applicant ☐ CPA ☐ T.D. ☐ R.1.47

Final	Original	Final	Original	Final	Original	Final	Original	Final	Original	Final	Original	Final	Original	Final	Original
1	1														
2	2														
3	3														
5	4														
6	5														
7	6														
8	7														
9	8														
10	9														
4	10														

NONE (Assistant Examiner)	(Date)	**Total Claims Allowed:** 10	
/ERIC D. BERTRAM/ Primary Examiner, Art Unit 3766 (Primary Examiner)	08/31/2017 (Date)	O.G. Print Claim(s) 1	O.G. Print Figure 8

U.S. Patent and Trademark Office

Part of Paper No. 20170831

Document Description: Issue Fee Payment (PTO-85B)

Issue Fee Transmittal Form

Application Number	Filing Date	First Named Inventor	Atty. Docket No.	Confirmation No.
14651677	12-Jun-2015	Gilbert ROTA	5001-1489	4162

TITLE OF INVENTION :

INSTRUMENT FOR DRILLING DENTAL ROOT CANALS

Entity Status	Application Type	Art Unit	Class - Subclass	EXAMINER
Regular Undiscounted	U.S. National Stage under 35 USC 371	3766	102000	ERIC BERTRAM

Issue Fee Due	Publication Due	Total Fee(s) Due	Date Due	Prev. Paid Fee
$960	$0	$960	11-Dec-2017	$0

1.Change of Correspondence Address and/or Indication Of Fee Address (37 CFR 1.33 & 1.363)

Current Correspondence Address:	Current Indicated Fee Address :
466 YOUNG & THOMPSON 209 Madison Street Suite 500 Alexandria VA 22314 UNITED STATES 7035212297 DocketingDept@young-thompson.com	
☐ Change of correspondence address requested, system generated AIA/122-EFS form attached	☒ Fee Address indication requested, system generated SB/47-EFS form attached

2.Entity Status

Change in Entity Status

○ Applicant certifying micro entity status; system generated Micro Entity certification form attached. See 37 CFR 1.29.
Note: Absent a valid certification of micro entity status, issue fee payment in the micro entity amount will not be accepted at the risk of application abandonment. If this box is checked, you will be prompted to choose a micro entity status on the gross income basis (37 CFR 1.29(a)) or the institution of higher education basis (37 CFR 1.29(d)), and make the applicable certification online.

○ Applicant asserting small entity status. See 37 CFR 1.27.
Note: If the application was previously under micro entity status, checking this box will be taken to be a notification of loss of entitlement to micro entity status.

◉ Applicant changing to regular undiscounted fee status.
Note: Checking this box will be taken to be a notification of loss of entitlement to small or micro entity status, as applicable.

Document Description: Issue Fee Payment (PTO-85B)

3.The Following Fee(s) Are Submitted:

☒ Issue Fee

☐ I authorize USPTO to apply my previously paid issue fee to the current fees due

☐ Publication Fee

☐ The Director is hereby authorized to apply my previously paid issue fee to the current fee due and to charge deficient fees to Deposit Account Number _____

☒ Advance Order - # of copies 1

☐ If **in addition to** the payment of the issue fee amount submitted with this form, there are any discrepancies in any amount(s) due, the Director is authorized to charge any deficiency, or credit any overpayment, to Deposit Account Number _____ . The **issue fee must be submitted** with this form. **If payment of the issue fee does not accompany this form, checking this box and providing a deposit account number will NOT be effective to satisfy full payment of the fee(s) due.**

4.Firm and/or Attorney Names To Be Printed

NOTE: If no name is listed, no name will be printed
For printing on the patent front page, list to be displayed as entered

1. YOUNG & THOMPSON
2.
3.

5.Assignee Name(s) and Residence Data To Be Printed

PLEASE NOTE: Unless an assignee is identified below, no assignee data will appear on the patent. If an assignee is identified below, the document has been filed for recordation as set forth in 37 CFR 3.11. Completion of this form is NOT a substitute for filing an assignment.

Name	City	State	Country	Category
MAILLEFER INSTRUMENTS HOLDING SÁRL	BALLAIGUES		switzerland	corporation

6.Signature

I certify, in accordance with 37 CFR 1.4(d)(4) that I am an attorney or agent registered to practice before the Patent and Trademark Office who has filed and has been granted power of attorney in this application. I also certify that this Fee(s) Transmittal form is being transmitted to the USPTO via EFS-WEB on the date indicated below.

Signature	/Eric Jensen/	**Date**	09-21-2017
Name	Eric Jensen	**Registration Number**	37855

FEE ADDRESS INDICATION FORM

Application Number	14651677	Art Unit	3766
Filing Date	12-Jun-2015	Examiner Name	ERIC BERTRAM
First Name Inventor	Gilbert ROTA	Attorney Doc. Number	5001-1489

INSTRUCTIONS: In order for the fee address identified on this form to be effective, the issue fee must have been paid for the application listed on this form. Only an address represented by a customer number can be established as the fee address for maintenance fee purposes (hereafter, fee address). A fee address should be established when correspondence related to maintenance fees should be mailed to a different address than the correspondence address for the application. For more information on customer numbers, see the Manual of Patent Examining Procedure (MPEP) § 403.

Please recognize as the Fee Address under the provisions of 37 CFR 1.363 the address associated with:

Customer Number:	287 DENNEMEYER & CO. LUXEMBOURG P.O. BOX 1502 L - 1015 LUXEMBOURG LUXEMBOURG 00352/499841-

Signature :

I certify, in accordance with 37 CFR 1.4(d)(4) that I am an attorney or agent registered to practice before the Patent and Trademark Office who has filed and has been granted power of attorney in this application.

Signature	/Eric Jensen/	**Date**	09-21-2017
Name	Eric Jensen	**Registration Number**	37855

Electronic Patent Application Fee Transmittal

Application Number:	14651677
Filing Date:	12-Jun-2015
Title of Invention:	INSTRUMENT FOR DRILLING DENTAL ROOT CANALS
First Named Inventor/Applicant Name:	Gilbert ROTA
Filer:	Eric Jensen/Lori-Ann Donofrio
Attorney Docket Number:	5001-1489

Filed as Large Entity

Filing Fees for U.S. National Stage under 35 USC 371

Description	Fee Code	Quantity	Amount	Sub-Total in USD($)
Basic Filing:				
UTILITY APPL ISSUE FEE	1501	1	960	960
PUBL. FEE- EARLY, VOLUNTARY, OR NORMAL	1504	1	0	0
Printed copy of patent - no color	8001	1	3	3
Pages:				
Claims:				
Miscellaneous-Filing:				
Petition:				
Patent-Appeals-and-Interference:				

Description	Fee Code	Quantity	Amount	Sub-Total in USD($)
Post-Allowance-and-Post-Issuance:				
Extension-of-Time:				
Miscellaneous:				
			Total in USD ($)	**963**

Electronic Acknowledgement Receipt

EFS ID:	30429786
Application Number:	14651677
International Application Number:	
Confirmation Number:	4162
Title of Invention:	INSTRUMENT FOR DRILLING DENTAL ROOT CANALS
First Named Inventor/Applicant Name:	Gilbert ROTA
Customer Number:	466
Filer:	Eric Jensen/Lori-Ann Donofrio
Filer Authorized By:	Eric Jensen
Attorney Docket Number:	5001-1489
Receipt Date:	21-SEP-2017
Filing Date:	12-JUN-2015
Time Stamp:	13:51:42
Application Type:	U.S. National Stage under 35 USC 371

Payment information:

Submitted with Payment	yes
Payment Type	CARD
Payment was successfully received in RAM	$963
RAM confirmation Number	092217INTEFSW13514000
Deposit Account	250120
Authorized User	Lori-Ann Donofrio

The Director of the USPTO is hereby authorized to charge indicated fees and credit any overpayment as follows:

37 CFR 1.17 (Patent application and reexamination processing fees)

37 CFR 1.20 (Post Issuance fees)

File Listing:

Document Number	Document Description	File Name	File Size(Bytes)/ Message Digest	Multi Part /.zip	Pages (if appl.)
1	Issue Fee Payment (PTO-85B)	Web85b.pdf	46200 9f4b98d255dedb581885868ae0b2b5810d0463da	no	2
Warnings:					
Information:					
2	Maintenance Fee Address Change	web85feeaddress.pdf	32721 b91e4113ddbb7c884d2bb174f07eb783fb9d730d	no	1
Warnings:					
Information:					
3	Fee Worksheet (SB06)	fee-info.pdf	35618 aaf8ec5249479c29db3ee15beab77862abfb3487	no	2
Warnings:					
Information:					
			Total Files Size (in bytes):	114539	

This Acknowledgement Receipt evidences receipt on the noted date by the USPTO of the indicated documents, characterized by the applicant, and including page counts, where applicable. It serves as evidence of receipt similar to a Post Card, as described in MPEP 503.

New Applications Under 35 U.S.C. 111
If a new application is being filed and the application includes the necessary components for a filing date (see 37 CFR 1.53(b)-(d) and MPEP 506), a Filing Receipt (37 CFR 1.54) will be issued in due course and the date shown on this Acknowledgement Receipt will establish the filing date of the application.
National Stage of an International Application under 35 U.S.C. 371
If a timely submission to enter the national stage of an international application is compliant with the conditions of 35 U.S.C. 371 and other applicable requirements a Form PCT/DO/EO/903 indicating acceptance of the application as a national stage submission under 35 U.S.C. 371 will be issued in addition to the Filing Receipt, in due course.
New International Application Filed with the USPTO as a Receiving Office
If a new international application is being filed and the international application includes the necessary components for an international filing date (see PCT Article 11 and MPEP 1810), a Notification of the International Application Number and of the International Filing Date (Form PCT/RO/105) will be issued in due course, subject to prescriptions concerning national security, and the date shown on this Acknowledgement Receipt will establish the international filing date of the application.

INFORMATION DISCLOSURE STATEMENT BY APPLICANT

(Not for submission under 37 CFR 1.99)

Application Number	14651677
Filing Date	2015-06-12
First Named Inventor	Gilbert ROTA
Art Unit	3766
Examiner Name	Eric D. BERTRAM
Attorney Docket Number	5001-1489

	12	62-241606	JP	A	1987-10-22		with English Abstract	
	13	2002-144122	JP	A	2002-05-21		with English Abstract	
	14	2002-205213	JP	A	2002-07-23		with English Abstract	
	15	2009-108382	JP	A	2009-05-21		with Computer Generated English Translation	
	16	H06-320323	JP	A	1994-11-22		with English Abstract	
Change(s) applied to document, /J.H./ 10/10/2017	17	WO2009001681	~~JP~~ WO	A1	2010-08-26		with English Abstract	
	18	2014/118587	WO	A1	2014-08-07		cited in European Search Report	
	19	637207	SU	A1	1978-12-15			
	20	01/19279	WO	A1	2001-03-22		with English Abstract	
	21	02/065938	WO	A1	2002-08-29		with English Abstract	
	22	2004/098438	WO	A1	2004-11-18			

ALL REFERENCES CONSIDERED EXCEPT WHERE LINED THROUGH. /EDB/

UNITED STATES PATENT AND TRADEMARK OFFICE

UNITED STATES DEPARTMENT OF COMMERCE
United States Patent and Trademark Office
Address: COMMISSIONER FOR PATENTS
P.O. Box 1450
Alexandria, Virginia 22313-1450
www.uspto.gov

APPLICATION NO.	ISSUE DATE	PATENT NO.	ATTORNEY DOCKET NO.	CONFIRMATION NO.
14/651,677	10/31/2017	9801696	5001-1489	4162

466 7590 10/11/2017
YOUNG & THOMPSON
209 Madison Street
Suite 500
Alexandria, VA 22314

ISSUE NOTIFICATION

The projected patent number and issue date are specified above.

Determination of Patent Term Adjustment under 35 U.S.C. 154 (b)
(application filed on or after May 29, 2000)

The Patent Term Adjustment is 0 day(s). Any patent to issue from the above-identified application will include an indication of the adjustment on the front page.

If a Continued Prosecution Application (CPA) was filed in the above-identified application, the filing date that determines Patent Term Adjustment is the filing date of the most recent CPA.

Applicant will be able to obtain more detailed information by accessing the Patent Application Information Retrieval (PAIR) WEB site (http://pair.uspto.gov).

Any questions regarding the Patent Term Extension or Adjustment determination should be directed to the Office of Patent Legal Administration at (571)-272-7702. Questions relating to issue and publication fee payments should be directed to the Application Assistance Unit (AAU) of the Office of Data Management (ODM) at (571)-272-4200.

APPLICANT(s) (Please see PAIR WEB site http://pair.uspto.gov for additional applicants):

Gilbert ROTA, Vaux et Chantegrue, FRANCE;
MAILLEFER INSTRUMENTS HOLDING SARL, Ballaigues, SWITZERLAND;
Paul-Henri VALLOTTON, Pampigny, SWITZERLAND;