United States Court of Appeals for the Federal Circuit

KAMSTRUP A/S,
Appellant

v.

AXIOMA METERING UAB,
Appellee

2021-1923

Appeal from the United States Patent and Trademark Office, Patent Trial and Appeal Board in No. IPR2019-01640.

Decided: August 12, 2022

MARK JOHNSON, Renner Otto, Cleveland, OH, for appellant. Also represented by SARAH LOUISE BOONE, KYLE BRADFORD FLEMING.

DAVID W. ALDRICH, Forge IP, PLLC, Shelton, CT, for appellee. Also represented by TODD M. OBERDICK.

Before REYNA, MAYER, and CUNNINGHAM, *Circuit Judges*.

REYNA, *Circuit Judge*.

Kamstrup A/S appeals a final written decision of the Patent Trial and Appeal Board. The Board found claims 1–15 of Kamstrup's U.S. Patent No. 8,806,957 unpatentable as obvious or anticipated. On appeal, Kamstrup challenges the Board's claim constructions. In addition, Kamstrup challenges the Board's anticipation and obviousness determinations largely on the basis that the Board erred in rejecting Kamstrup's claim construction arguments. We affirm.

BACKGROUND

The '957 Patent

Kamstrup owns U.S. Patent No. 8,806,957 (the "'957 patent"). The '957 patent describes ultrasonic flow meters and housings. '957 patent abstract. The specification discloses that the meters are used for "calculating a consumed quantity of water, heat, cooling, gas or the like." *Id.* at 1:27–30. Ultrasonic flow meters include "housing" to protect electronic components, such as a display or battery. *Id.* at 1:32–38.

The '957 patent is directed to "an ultrasonic flow meter housing in the form of a monolithic polymer structure being cast in one piece." *Id.* at 1:58–60. It explains that "the present invention can be fabricated with a reduced number of steps compared to existing meters, since only a single step

is used to form the monolithic polymer structure." *Id.* at 2:6–9. Figure 1A shows an embodying flow meter housing:

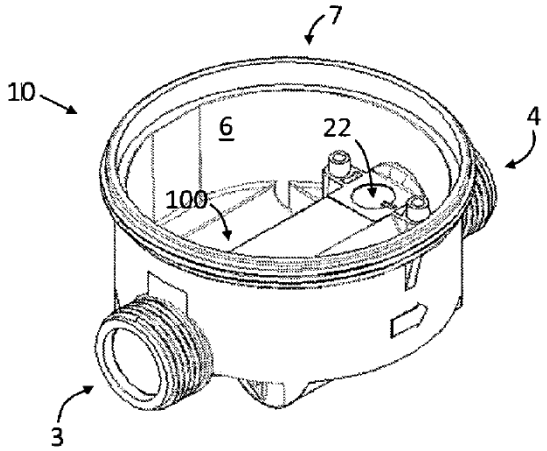

Independent claim 1 states:

> An ultrasonic flow meter housing comprising:
>
> a monolithic polymer structure *being cast in one piece, the monolithic structure includes a flow tube and a cavity separated from the flow tube*, wherein the flow tube defines a through-going straight flow section arranged for passage of a fluid between an inlet and an outlet, wherein a part of a wall of the flow section is part of an inside surface of the cavity, *so that the flow section and the cavity has a shared wall area*; and
>
> wherein the cavity is arranged for housing at least one ultrasonic transducer, at the shared wall area; and
>
> a measurement circuit operationally connected to the at least one ultrasonic transducer so as to allow measurement of a flow rate of the fluid.

Id. at 6:40–55 (emphasis added).

Inter Partes Review

On September 23, 2019, Axioma petitioned for inter partes review of all 15 claims of the '957 patent. The Patent Trial and Appeal Board instituted review. In its final written decision, the Board found the challenged claims unpatentable as obvious or anticipated. *Axioma Metering UAB v. Kamstrup A/S*, No. IPR2019-01640, 2021 WL 1235790 (P.T.A.B. Apr. 1, 2021).

In reaching its final written determination, the Board construed elements of the claims. In particular, it construed "cast in one piece" as a product-by-process claim element. *Id*. at *5–9. The Board explained that the claim language describes the process of "casting" the polymer housing and does not describe the housing's structure. *Id*. at *6. After construing the claim element, the Board concluded that it does not impart patentable weight to the claims and thus should not be considered as part of any anticipation or obviousness analysis. *Id*. at *5–9. The Board explained that Kamstrup did not present any evidence showing that the claim element provided structural and functional differences distinguishing it from the prior art. *Id*. (citing *Greenliant Sys., Inc. v. Xicor LLC*, 692 F.3d 1261, 1268 (Fed. Cir. 2012). Thus, it concluded that the claim element was not entitled to patentable weight. *Id*.

The Board also construed the phrase "cavity separated from the flow tube" to require that the interior of the flow tube is separated from the surrounding cavity by the shared wall. *Id*. at *9–10. In doing so, the Board rejected Kamstrup's argument that the cavity cannot surround the flow tube. *Id*. The Board explained that Kamstrup's proposed construction was at odds with the claim language, which merely requires that "the flow tube cannot be so separated from the cavity that no part of the flow section shares a wall with the cavity." *Id*. at *10. The Board also pointed to similar disclosure in the specification. *Id*.

Based on its construction of the above terms, the Board found that European Patent Application EP 1 482 284 A1 ("Ueki") anticipates independent claims 1 and 11 and dependent claims 2, 5, 7, 9, 12, and 13 of the '957 patent. *Id.* at *20.

Ueki is titled "Flow sensor" and "relates to a flow sensor for detecting the flow quantity of a fluid." Ueki ¶ 1. Figure 11 "is an exploded perspective view of the detection section of the flow sensor." *Id.* at ¶ 86.

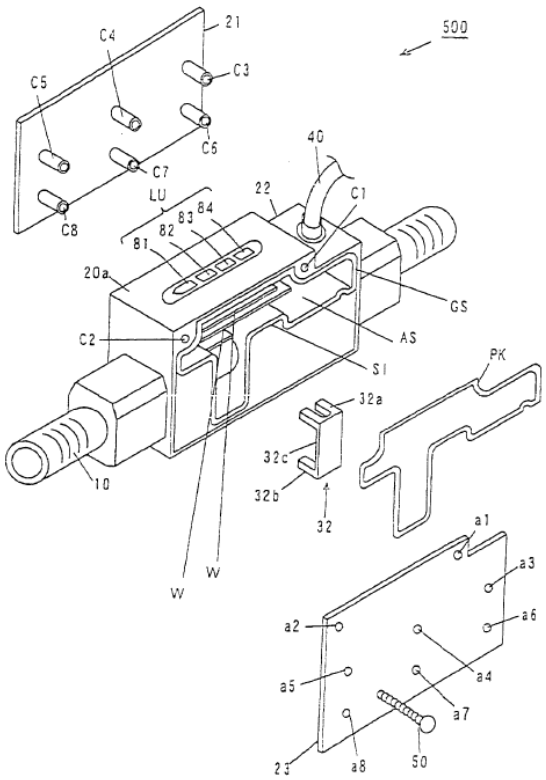

Id. at Fig. 11.

The detection section (500) includes casing members (21, 22, and 23) and a through water pipe line (10). *Id.* at ¶ 87. Ueki further discloses that the water pipe line is "formed integrally" with casing member 22. *Id.*

DOCKET ALARM

Explore Litigation Insights

Docket Alarm provides insights to develop a more informed litigation strategy and the peace of mind of knowing you're on top of things.

Real-Time Litigation Alerts

Keep your litigation team up-to-date with **real-time alerts** and advanced team management tools built for the enterprise, all while greatly reducing PACER spend.

Our comprehensive service means we can handle Federal, State, and Administrative courts across the country.

Advanced Docket Research

With over 230 million records, Docket Alarm's cloud-native docket research platform finds what other services can't. Coverage includes Federal, State, plus PTAB, TTAB, ITC and NLRB decisions, all in one place.

Identify arguments that have been successful in the past with full text, pinpoint searching. Link to case law cited within any court document via Fastcase.

Analytics At Your Fingertips

Learn what happened the last time a particular judge, opposing counsel or company faced cases similar to yours.

Advanced out-of-the-box PTAB and TTAB analytics are always at your fingertips.

API

Docket Alarm offers a powerful API (application programming interface) to developers that want to integrate case filings into their apps.

LAW FIRMS

Build custom dashboards for your attorneys and clients with live data direct from the court.

Automate many repetitive legal tasks like conflict checks, document management, and marketing.

FINANCIAL INSTITUTIONS

Litigation and bankruptcy checks for companies and debtors.

E-DISCOVERY AND LEGAL VENDORS

Sync your system to PACER to automate legal marketing.